INTERNATIONAL FRAMEWORK FOR NUCLEAR ENERGY COOPERATION
SMALL MODULAR REACTOR WORKSHOP
June 11-12, 2014 ● Dead Sea, Jordan

Report of the Small Modular Reactor Workshop: Practical Deployment Issues and Approaches

Including several potential deployment models based on workshop scenario discussions

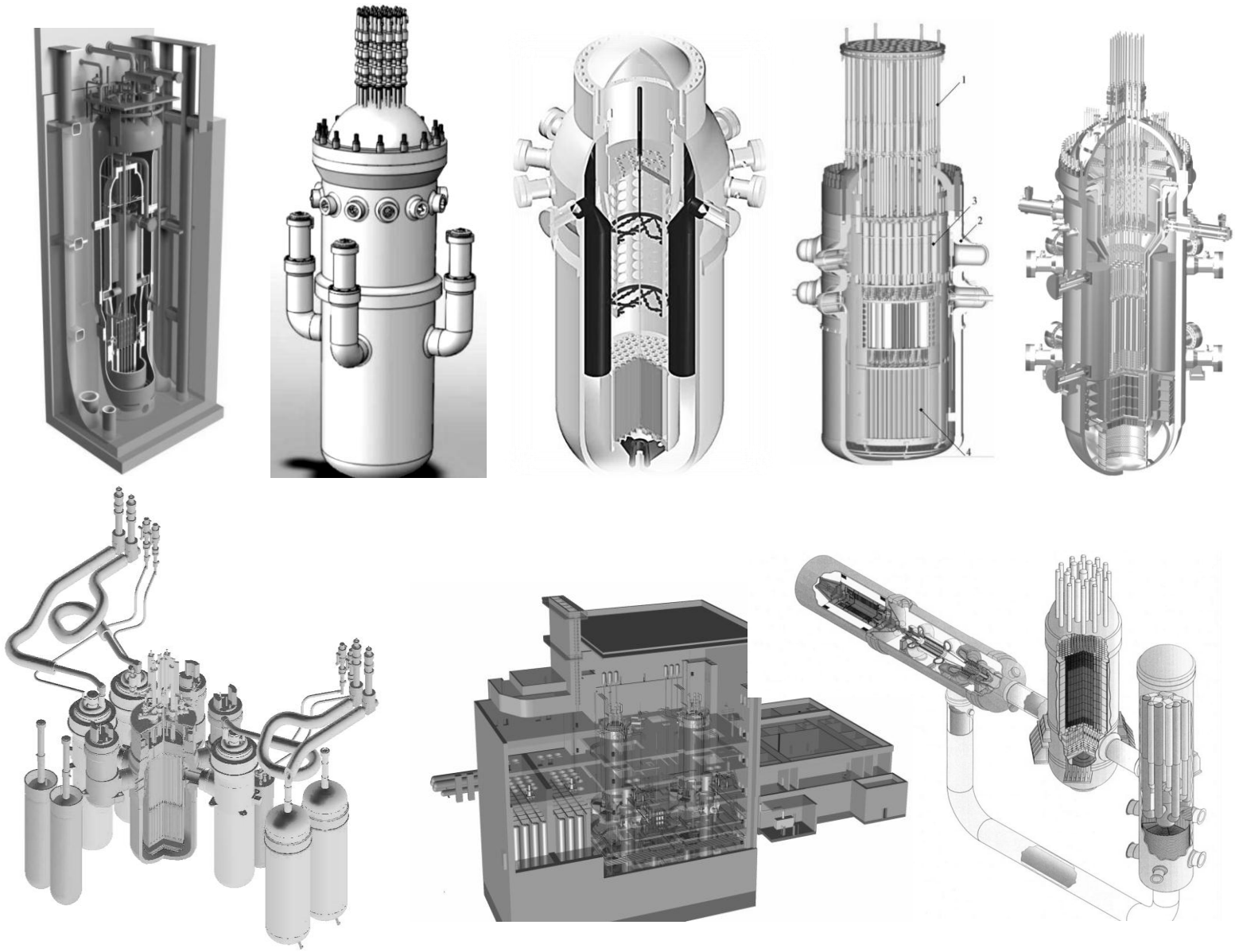

Images from the Small Modular Reactor vendor workshop presentations are found on the cover and throughout the report. Those complete presentations can be found on the CD accompanying this report.

Contents

1. Introduction **5**

2. SMR Deployment Models **8**

2.1 Model 1a. Existing Nuclear Program – Deployment in a Regulated Market 9

2.2 Model 1b. Existing Nuclear Program – Deployment in a Merchant Market 10

2.3 Model 2a. Embarking Nuclear Program – Build, Own, Operate 11

2.4 Model 2b. Embarking Nuclear Program – Host Government Ownership 12

3. Moderated Scenario Sessions: Overview and Format **13**

4. Moderated Scenario Session 1:

Build a Plan for Deployment of an SMR Based on Substantial Capital, Credit, and Infrastructure **15**

4.1 Scenario Outcome: Key Issues Associated with Deployment 17

4.2 Breakout Sessions 21

5. Moderated Scenario Session 2:

Build a Plan for Deployment of an SMR Based on Limited Capital, Credit, and Infrastructure **22**

5.1 Scenario Outcome: Key Issues Associated with Deployment 24

5.2 Breakout Sessions 29

6. General Findings **30**

7. Acknowledgments **31**

8. Appendices **32**

A: Workshop Agenda 32

B: Speaker Biographies 37

C: Registration List 53

D: Breakout Session Results 57

On attached CD

Also available at www.ifnec.org

E: Moderated Scenario Session Materials

F: Breakout Session Materials

G: Information for Vendors to Address

H: Workshop Presentations

- H1. Global Nuclear Reactor Market State of Play by Hadid Subki
- H2. Financing of Small Modular Reactors by Paul Murphy
- H3. National Market Perspectives Regarding SMRs by
  Kamal Araj, Jordan
  Pete Lyons, United States
  Maher Alodan, Saudi Arabia
- H4. Small Modular Reactor Descriptions
  - H4.A. NuScale, United States, Christopher Colbert
  - H4.B. SMART, Korea, Suhn Choi
  - H4.C. CAREM, Osvaldo Calzetta Larrieu, Argentina
  - H4.D. OKBM, Yuri P. Fadeev, Russia
  - H4.E. ACP100, Xu Bin, China
  - H4.F. GTHTR300, Dr. Xing L. Yan, Japan
  - H4.G. VK-300/SVBR-100, Russia
  - H4.H. HTR-PM, Zheng Jianfeng, China
- H5. UxC Global SMR Market Outlook by Jonathan Hinze

I: Breakout Session Notes

1. Introduction

A growing number of countries, including a number of members of the International Framework for Nuclear Energy Cooperation (IFNEC), are considering the deployment of Small Modular Reactors (SMRs). SMRs have the promise of offering several desirable features compared to large light water reactors, such as:

- lower capital costs
- reduced financial risk
- greater flexibility to add additional capacity while concurrently generating electricity from the previous unit(s)
- enhanced safety features
- industrial and co-generation applications (e.g., desalinization, process heat)
- greater compatibility for electricity markets with limited electricity grids
- modular fabrication processes that significantly reduce onsite component assembly and associated quality assurance demands
- off-grid and remote electricity generation needs

At the 2013 IFNEC Executive Committee meeting in Abu Dhabi, United Arab Emirates (UAE), the Jordan representative proposed and offered to host a workshop on SMR technology.[1] The proposal was accepted, and IFNEC held a first-of-its-kind stakeholder-wide, scenario-based SMR Workshop at the Movenpick Resort on the Dead Sea, Jordan, on June 11-12, 2014.

Dead Sea, Jordan

The goal of the Workshop was to gain a better understanding of the expected activities and issues associated with the deployment of SMRs from the perspectives of a utility, national energy planning authority, regulatory authority, and Nuclear Energy Program Implementation Organization (NEPIO). The Workshop addressed how SMRs could be deployed in markets represented by the countries of IFNEC,

[1] For the purpose of this workshop, SMRs were defined as reactors with a nominal output of 300 MWe or less that are projected to be ready for commercial deployment within the next 15 years.

including countries seeking to use nuclear energy for the first time. This includes those with limited infrastructure and resources that have relatively small electric grids and insufficient capital to finance deployment of medium and large-sized reactors. To do this, the Workshop took an enterprise-wide approach by convening a broad spectrum of experts who role-played key roles, in two separate hypothetical Scenario Sessions, to develop successful SMR deployment plans. Through the Scenario Session discussions, moderated by an experienced utility executive, these experts identified and considered various SMR deployment options and approaches.

Movenpick Hotel on the Dead Sea

Foundational knowledge presentations accompanied the Scenarios Sessions, including presentations by leading experts on the global state of play of SMR development and deployment activities; optional financial models and approaches that could be used for SMR projects; SMR national perspectives from Jordan, the United States, and Saudi Arabia; and presentations by eight SMR vendors from Argentina, China, Japan, Korea, Russia, and the United States.

Workshop attendance included 120 representatives from 35 countries, 90 companies and nuclear-related entities, as well as the International Atomic Energy Agency (IAEA) and World Nuclear Association (WNA).

Workshop Attendees

The Workshop resulted in key findings that served as the basis for the identification of potential SMR deployment models intended for use by IFNEC energy planning authorities in both markets that are seeking to deploy nuclear energy for the first time (ie, embarking countries), as well as those experienced markets with existing nuclear power generation capacity. These models, reviewed by the Scenario Sessions expert panelists, provide a basic demonstration of the range of issues that would need to be addressed for SMR deployment and show some of the robust approaches available to address those issues.

2. SMR Deployment Models

The Workshop resulted in significant insights into the challenges of SMR deployment. The following sections of this report provide a record of those results. In addition, the Workshop provided the basis for developing potential models for deploying SMR technology. Deployment models can provide potential customers, including IFNEC countries, with a practical understanding of how to begin thinking about approaching the challenges to introducing SMR technology.

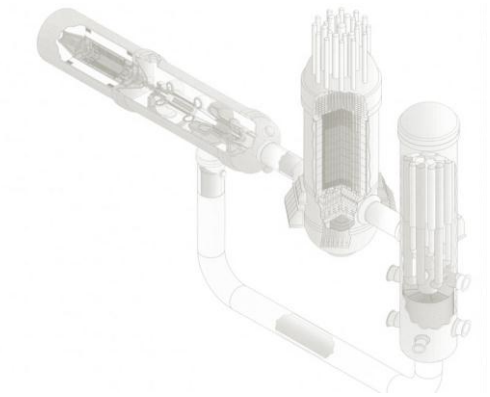

GTHTR300 – Japan

Four deployment models, drawing from the results of the Workshop, were developed and are presented below. These models are simple, and address only some of the many areas that would be part of deployment. They recognize the very real challenges, but also show that there is an array of practical approaches to addressing those challenges. The models were selected to present approaches to deployment in distinctly different SMR market situations. There are many variations between these particular market situations and many different combinations of approaches to a successful deployment.

Two models have been developed for each of the two Scenarios discussed in the Workshop. These Scenarios and corresponding models are:

1. Existing Nuclear Program Scenario

Model 1a. Deployment in a Regulated Market[2]
Model 1b. Deployment in a Merchant Market[3]

2. Embarking Nuclear Program Scenario

Model 2a. Build, Own, Operate[4]
Model 2b. Host Government Ownership

For each model, different approaches to regulation, financing, technology evaluation/procurement, and risk management are presented.

The models are based on the following assumptions:

- There is a final design certification from the exporting country
- ***Existing Nuclear Program Scenario***: The country is seeking an initial or early vendor export; to be considered, reactors will have completed commercial level demonstration and a design certification from a recognized, experienced regulator from the exporting country.
- ***Embarking Nuclear Program Scenario***: The country has a newly established nuclear program and independent safety regulator; the country is seeking nth export of a small modular reactor design from among the available vendors.

[2] The NPP will be developed within a consumer electricity market in which rates are governed by a regulatory body, i.e., rates are a function of governmental policy.
[3] The NPP will developed within a consumer electricity market in which rates are a function of competitive pricing among two or more suppliers, i.e., rates are a function of price competition.
[4] The NPP will developed within a consumer electricity market in which rates are a function of competitive pricing among two or more suppliers, i.e., rates are a function of price competition.

Scenario 1: Existing Nuclear Program

2.1 Model 1a - Deployment in a Regulated Market

Regulatory Approach

- Regulatory authority will need to independently review the adequacy of the design certification from vendor country regulator (but such review will not constitute an independent design certification *ab initio*)
- Regulatory authority will need to review and modify as appropriate the existing regulatory regime to address SMR-specific attributes, to be done based on reviews of vendor country SMR-specific regulation as well as IAEA guidance
- The utility/project developer will need to bear the regulatory risk of the project

Financing Strategy

- Maximize vendor country ECA[5] debt to be supported by host country sovereign guarantee
- Utilize utility balance sheet for equity, as supported by rate-base adjustments
- Consider vendor equity and the cost of equity, the return the equity holder would seek
- If utility balance sheet is small (perhaps <$5B USD), then consider host country guarantee commercial of bank tranche of debt or have host country provide direct debt to the project
- Use classic corporate financing for remaining debt needed beyond ECA provided debt

Technology Evaluation / Procurement

- Consider qualifying designs, with emphasis on an evaluation of vendor/EPC contractor[6] capability to perform and the extent of financing participation offered by vendor

Risk Management

- Vendor/EPC contractor should be expected to take project delivery risk (cost and schedule, except for regulatory deviations by host country regulator)
- Utility to handle operations (assuming it is operating an existing nuclear asset already)

VBER Type – Russia

[5] Export Credit Agencies (ECA) function to support major export orders for their domestic industry by providing financing (e.g., direct loans, loan guarantees, etc.) in support of the project. ECA support can also reduce the financial risk, and, therefore, the overall cost of loans for a project.

[6] The EPC contractor is the counterparty to the owner under the EPC Contract, providing for the engineering, procurement and construction (EPC) of the nuclear power plant.

2.2 Model 1b - Deployment in a Merchant Market

Regulatory Approach

- Regulatory authority will need to independently review the adequacy of the design certification from vendor country regulator (but such review will not constitute an independent design certification *ab initio*)
- Regulatory authority will need to review and modify as appropriate the existing regulatory regime to address SMR-specific attributes, to be done based on reviews of vendor country SMR-specific regulation as well as IAEA guidance
- Need to provide host government support for regulatory uncertainty

Financing Strategy

- Maximize vendor country ECA debt to be supported by host country sovereign guarantee
- Seek vendor equity
- Host country will need to guarantee commercial bank tranche of debt or provide direct debt to the project
- Offtake: either (1) Developer can enter into PPAs[7] to support financing needs; or (2) host country to provide long-term PPA / CFD[8] that supports financial model (assuming market-based PPAs are not obtainable)

Technology Evaluation / Procurement

- Emphasis on competitive procurement among qualifying technologies, as price and risk transfer will be key evaluation factors

Risk Management

- Vendor/EPC contractor to take project delivery risk (cost and schedule, but for regulatory deviations by host country regulator)
- Utility to handle operations (assuming it is operating an existing nuclear asset already)
- Host government is taking electricity market risk (assuming Offtake Option #2)

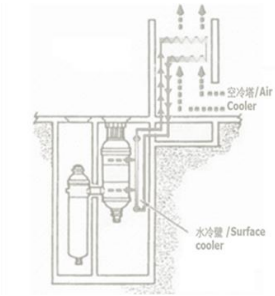

HTR-PM Project – China

[7] Power Purchase Agreements (PPA) are contracts between the seller of electricity and the purchaser that can include such terms as when the project will begin commercial operation, the schedule for delivery of electricity, penalties for under delivery, payment terms, and termination. A PPA is the principal agreement that helps to define the revenue and credit quality of a generating project and is thus a key instrument of project finance. PPAs can have both usage and availability components.

[8] The Contract for Difference (CFD) is a contract between a special purpose government entity and the electricity producer that guarantees a minimum sale price for the electricity generated over a period of time in a market where the electricity price fluctuates. The developer / producer takes the project development and delivery risks.

Scenario 2: Embarking Nuclear Program

2.3 Model 2a - Build, Own, Operate

Regulatory Approach

- Recognition of design certification from vendor country
- Newly established regulatory authority will want to import the regulatory structure from vendor country, with IAEA support
- Import ex-pat regulators for the initial basis of experience and expertise, while developing host country succession plan over time
- Host government will need to assume the risk of regulatory delays and unpredictability (i.e., cost and schedule issues not due to the fault of the Project Company)

Financing Strategy

- Project company to provide all equity and debt financing
- Merchant Market: Host country to provide long-term PPA/CFD that supports financial model
- Regulated Market: Host country to provide regulated rate of return (or subsidy above regulated rate of return) to support financing model

Technology Evaluation / Procurement

- Host country to assess suitability of technologies before considering project companies for Build, Own, Operate contractual arrangement
- Evaluate project companies primarily on the basis of demonstrated capability to perform and viability of proposed financing plan

Risk Management

- Project company takes project delivery risk (cost and schedule, but for regulatory deviations by host country regulator)
- Host Government takes electricity market risk
- Project to be operated by experienced foreign entity

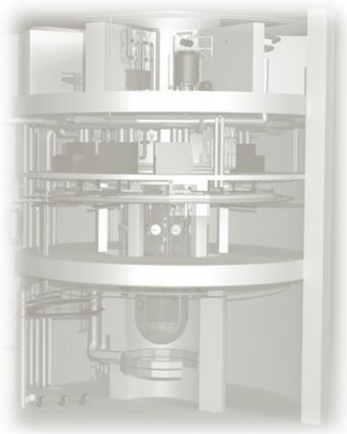

CAREM25 – Argentina

2.4 Model 2b - Host Government Ownership

Regulatory Approach

- Recognition of design certification from vendor country
- Newly established regulatory authority will want to import the regulatory structure from vendor country, with IAEA support
- Import ex-pat regulators for the initial basis of experience and expertise, while developing host country succession plan over time
- Host government would take all regulatory risk

Financing Strategy

- Maximize vendor country ECA debt to be supported by host country sovereign guarantee
- Consider vendor equity and the cost of equity, the return the equity holder would seek
- If vendor equity is added, host government will need to provide basis for assuring long term rate of return – long term PPA, CFD
- Host government to provide balance of financing
- Host government to consider bilateral arrangements with vendor country if host government financial resources are limited

Technology Evaluation / Procurement

- If bilateral structure is probable, host government to assess technology from "partnering" exporter government prior to final determination of overall project structure
- Host government to consider larger bilateral relationship and tied commercial opportunities
- Absent bilateral arrangement, pursue competitive procurement, with consideration on financing options from bidders

Risk Management

- Vendor/EPC contractor to take project delivery risk (cost and schedule, but for regulatory deviations by host country regulator)
- Host government takes electricity market risk
- Project to be operated by experienced foreign entity

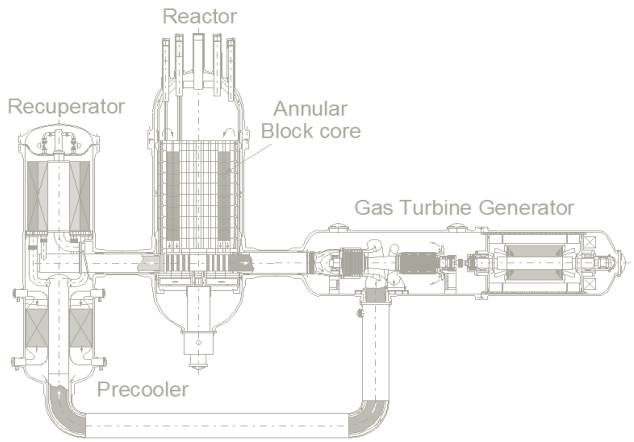

GTHTR300 – Japan

3. Moderated Scenario Sessions: Overview and Format

The Workshop included two scenario-based sessions that were moderated by an experienced utility executive. This scenario-based/expert panel/moderated discussion format focused on clear objectives and outcomes, and was used successfully in the two previous IFNEC workshops in London and Abu Dhabi.

One hypothetical Scenario was set in an embarking country and the other was set in a country that already has nuclear power generating capacity in place. The Moderated Scenario discussions were conducted for each Scenario with expert role players representing the range of stakeholders critical to deploying SMR technology in a country:

- Utility
- Energy Planning Authority
- Vendor
- Commercial Banker
- Rating Agency
- ECA
- Legal Consultant
- EPC
- Insurer
- Safety & Security Regulator
- Electricity Market Regulatory
- Host Country Strategic Advisor

The underlying assumption for both Scenarios was that the country has decided to pursue the deployment of SMRs.

Each key stakeholder was represented by an expert in his or her respective discipline. None of the stakeholders' views offered during the role playing were attributed to them or to their employer. Consistent with this format, stakeholders were referred to by the moderator by function: vendor, banker, legal consultant, etc. throughout the Scenario Session discussions. The spontaneous, interactive nature of the Scenario discussions provided attendees, and countries interested in considering the deployment of SMR technology, with unique insights into both the range of challenges facing an SMR deployment and the robust opportunities available to address those challenges.

Moderated Scenario Session
Facilitated by the Moderator, Gary Leidich

The expert panel was provided with elements of an SMR deployment plan, which served to facilitate discussion and lead to the identification of key issues associated with deployment for each Scenario. These elements, organized under specific questions to be addressed, were provided to the expert panel to initiate dialogue and facilitate the identification of key issues associated with SMR deployment in the particular Scenario being analyzed.

Elements of an SMR Deployment Plan

(1) What Does The Country Need To Do To Support Deployment?

- Licensing/regulatory approach
- Electricity market structure
- Role in financing
- Role in ownership
- SMR technology in the early stages of deployment

(2) How Can Deployment Be Optimized By Decisions Regarding What Is To Be Purchased?

- Technology selection
- Vendor choice
- Host country supply chain

(3) How Can Deployment Be Optimised By The Choice Of The Business Model And Financing Arrangement?

- Ownership arrangements
- Operating arrangements
- Financing arrangement

(4) What Are The Risks Associated With SMR Early Deployment, And How Can They Best Be Mitigated?

- Schedule risk
- Cost risk
- Financing risk
- Production/design risk
- Regulatory/licensing risk
- Siting risk
- Others

The moderator guided the discussions and collectively challenged the experts to identify and discuss, from their perspectives, the key issues that needed to be addressed to develop a successful deployment plan. The format elicited expert opinions on the critical issues associated with SMR deployment from stakeholders with different, and sometimes conflicting, agendas.

The two Moderated Scenario Sessions were followed by four Breakout Sessions for each Scenario. The objective of the Breakout Sessions was to review and evaluate the previous discussions, and increase understanding and insights into specific topics. The Breakout Sessions provided Workshop attendees with the opportunity to add value by assessing the key issues identified in the Moderated Scenario Sessions. The Breakout Session co-chairs presented the findings of their small group discussions in a subsequent Plenary Session.

4. Moderated Scenario 1 Session:

Build a Plan for Deployment of a SMR Based on Substantial Capital, Credit, and Infrastructure

Scenario 1 Description

General Premise

- The country addressed in the hypothetical scenario has an established nuclear power program and has decided to add SMR technology to the program as soon as practicable. The decision includes a determination that early deployment is important and vendor models that are in the initial stages of deployment will be considered.
- The government department/ministry responsible for energy policy and regulation has been charged with developing a National SMR Deployment Plan with the goal of the reactor(s) becoming operational as early as practicable for electric power generation. Adding electric power generating capacity using SMRs at some time in the future can be for a number of purposes, to include: (1) installing small capacity nuclear power for distributed electricity requirements (local/regional electricity associations), (2) making smaller capacity additions to an existing nuclear power plant, or (3) replacing existing fossil fuel plants being retired or facing uneconomical environmental upgrades. For the purpose of focusing the Scenario discussion, it will be assumed that the deployment plan will address number 2 above, making smaller capacity additions to an existing nuclear power plant.
- The Deployment Plan must identify critical activities and optional approaches to completing procurement, and construction and operation of an SMR. The Plan needs to identify and address (and resolve) obstacles and challenges to early deployment.
- The hypothetical country is relatively large, and enjoys substantial capital, credit and infrastructure.

Assumptions

- *Capacity*: Individual SMRs in the range of 35 - 300 MWe.
- *Cost*: Nominal capital cost will be $1 billion USD for a 250 MWe plant, a plant with this total capacity may involve more than one reactor.
- *Modularity*: Modular construction meaning major components are designed specifically for factory fabrication, to be shipped and assembled onsite.
- *Design*: Reactor design ultimately selected may be in the very early stages of deployment. For rectors to be considered the vendor country regulatory approvals must have been obtained; reactors will have received licenses for export.
- *Schedule*: Expected realistic and achievable deployment plan is to have design completed, regulatory approval, constructed and project operational by the earliest practicable date.

Scenario 1 Description
(continued)

Expected Benefits

- Potentially small initial capacities promote the consideration of future capacity expansion.
- The capital cost range for small capacity reactors opens up opportunities for alternative financing techniques.
- Reactor capacity ranges meet the needs of utilities with smaller power requirements.
- Good capacity fit for replacing coal/oil-fired plants that retire or require uneconomical environmental upgrades.
- SMR can provide back-up power for renewables.
- Robust remote site and distributed electricity applications.
- Improved economics in a carbon tax environment.

Ed McGinnis speaking at the Gala Dinner

4.1 Scenario 1 Outcome: Keys to Deployment

The Moderated Scenario Session resulted in the following set of key deployment considerations.

A. Applicability of Existing Safety Regulations

SMRs have not previously operated in the country and consequently have never been the subject of regulatory safety reviews. They have also never been licensed.

Key deployment question: ***What should be the approach to assure that the national laws, regulations, and guidelines reflect appropriate consideration of the SMR technology?***

Established legal and regulatory structures enjoy confidence based on experience. Do those structures need to be changed to address the differences between reactors previously licensed and SMRs? This question involves many issues that include individual control room requirements when multiple small reactors are being operated, and consideration of smaller source terms and different operational safety features.

Ultimately, a balance needs to be struck between tailoring regulations to fit the case and avoiding application of existing regulations that are not suited to the SMR case.

Tailoring Regulation Changes to SMR Technology

However, changes to tailor regulations to SMR technology must be made carefully. There needs to be a balance reached between approaching SMRs as a "new technology" and recognizing the relationships between SMRs and proven technologies. The SMR deployment strategy should take advantage of past experience with existing technology and regulations, including lessons learned, and take a very measured approach whenever there is any departure from the knowledge base that exists.

For regulation changes to have positive effects, any changes considered that are to take account of the unique features of SMRs must be clearly and reasonably responsive to the SMR technology AND not be expected (based on the new technology coupled with changed regulations) to result in extended regulatory compliance delays. This can be accomplished by assuring that the consideration of changes includes the full range of stakeholders who will be affected, such as the utility/owner, EPC contractors, parties in the supply chain, etc. The conclusions made regarding appropriate changes can have important impacts on financing, project costs, and even the feasibility of the SMR technology.

An effort needs to be made to see that the first SMR project addresses these long term regulatory issues; the project developer will want to avoid revisiting the same issues with subsequent projects.

B. Support for Financing

There are many potential sources for financing and many approaches to facilitating financing.

Key deployment question: ***What alternative project approaches might be available to support the financing of the SMRs?***

The smaller scale of financing expected to be needed for SMRs, compared to large reactor projects, will open the possibility for innovative opportunities for equity positions and new categories of investors such as a small Mankala model.[9] With a project proceeding on schedule and budget, seeking equity investments to take the place of debt might be possible during the construction phase, but likely refinancing will be the course pursued.

Financing will depend on a number of factors, such as confidence in schedule and cost, but perhaps the key factor will be the need for project arrangements that provide a predictable and stable revenue stream from the sale of electricity. This is because of the high up-front costs that need to be amortized with sufficient certainty by income from reactor operation. There are a number of ways to achieve the needed level of certainty and they all rely on some level of government involvement.

Approaches to SMR Financing

Regulated Market: One supportive approach is a regulated market. A regulated electricity market structure, by controlling rates, is more favorable to nuclear power in general than an unregulated market.

Passive Government Involvement: Another approach to support financing is passive government involvement in the project thru loan guarantees during the construction phase and initial period of operation, when financing risks are the highest. Other passive alternatives include subsidies such as production tax credits, investment tax credits, or contract support to assure a sufficient level of revenues to make the project work economically such as the "contract for difference" approach used in the UK.

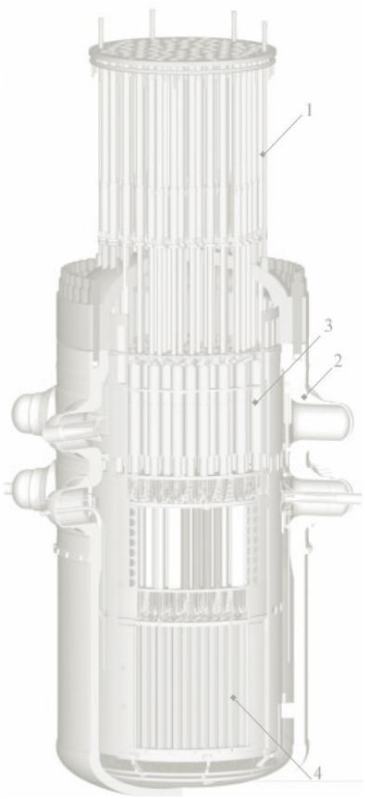

VK-300 – Russia

Direct Government Involvement: More direct government involvement to support financing could include total or partial ownership of the project. This option depends on how active the government is in the project; the more active the involvement the more government ownership is indicated. The level of involvement will depend on the extent of the commitment the government has made to SMR deployment, coupled with the government's assessment of what it will take to make the SMR project happen. Government involvement that is direct and immediate can attract investment even if it means ownership on a contingent basis. Government financing can also be taken out after commercial operation through refinancing strategies, thus making the government financing a temporary financing.

Private Investment: If the project is to include private investors, it will be important for the investors to have confidence that there is a long term strategy for SMR deployment (i.e., how SMRs fit in the government's energy policy and plans) and the extent of public support. The current project cannot be seen as a "one-off" or "white elephant" project. Also,

[9] The 'Mankala model' is an ownership model for energy producers which is unique to the Finnish energy markets and originated in the 1960s. In this model, several large industrial electricity consumers jointly invest in a new power plant through a joint venture. Each participant contributes a proportion of the costs of building and operating the plant, in return for electricity supplies in proportion to its ownership share, receiving such electricity essentially at cost.

these investors will tend to focus on safety and reliability and look to the established technology base for reference.

ECA and Vendor Financing: As a general consideration, the government will want to see (1) the exporting country's ECA (or government lending authority) providing debt financing, and also, (2) the reactor vendor interested in providing some sort of assistance. In exchange for the host country helping to de-risk one of the vendor's first SMR projects, the host country might want to pursue longer term participation by the exporting country and vendor.

Corporate Financing: Due to the smaller scale of financing that is required, corporate financing can be the best option if the project developer is large and credit worthy. In that case, it may be able to draw on traditional financing of both debt and equity. With an unregulated market, for corporate financing to be considered direct government support will be needed such as loans, loan guarantees, or contract for difference.

In the case of an early deployment project it is less likely that corporate financing will be able to work. The lack of experience means added uncertainty regarding what the project will really end up costing. It is hard for a utility to make investment decisions without an operating reference plant. To be considered, corporate financing will need additional support (assumption of risk) from the vendor or government. The key for corporate financing will be how the developer is able to allocate the risks of the project. The government (SMR proponent) will be the default for assumption of risks that can otherwise not be allocated. Furthermore, the extent of government support and government credit worthiness will play a significant role in determining the cost of the financing, including export credit agency debt financing.

C. Early Procurement of SMR Technology

The procurement of a new technology in its early stages of commercial demonstration will have special challenges.

Key deployment question: ***What considerations will be important in developing the SMR technology procurement strategy?***

The design of the procurement process will need to encompass the overall project, technology provider, EPC contractor, financing structure and sources, operations support, supply chain, and required resources. For example, the tender for the EPC contractor should be included as part of the tender for the reactor to foster early development of a project team.

Evaluating Technologies

In evaluating technologies, comparative costs should be one consideration, but comparative features and benefits should also be given serious consideration.

SMR designs that qualify for consideration in the procurement process will need to have a design certification from the country of origin by a regulator that is recognized as independent, experienced and reputable. The host country regulator will need to advise the government of its level of comfort with the design certification and then independently develop confidence in whatever design is selected.

The insurer will need to get comfortable with the new technology and early engagement will be needed to secure that comfort. Multinational sharing of information regarding the vendor's technology will be needed even down to the proprietary level.

The procurement approach should take advantage of the scalability of the technology, starting with a small scale initial commitment to establish a basis for experience.

D. Addressing Project Risk

Any demonstration of a new technology or design will involve uncertainties that will remain until the project is completed.

Key deployment question: ***How will considerations of risk impact the project, and are there approaches to effectively addressing these risks?***

Considering this Scenario involves the early deployment of a reactor design that will rely on modular construction, lenders will look to see that there is a strong EPC contractor and that the vendor is assuming a fair portion of the risk. Also of critical important will be the nature of the supply chain risk. Since companies will be providing a new, highly regulated product, work on developing approaches to understanding and mitigating this risk needs to be part of the early planning stages of the project. The primary risk in this area will be on the start-up capabilities of the suppliers.

The real risk for the project in this Scenario is associated with the early deployment status of the design. For an early deployment project, all risks are magnified.

Risks to Consider

Regulatory and Licensing Risk: Regulatory and licensing risk, particularly with the early deployment of a reactor design, can have a major impact on financing. A fair amount of regulatory risk can initially be reduced as a result of the design and the construction license being completed before major financing is required. For the financing of the major construction, the focus will be on when the plant is completed and what will be needed for it to go into operation. There are tools that can be used to mitigate this risk such as standby insurance provided by the government. This approach can provide some financial backstop against delay risk.

Completion Risk: The planning authority and host government need to understand the back-up plan for completion risk issues, and what will happen if the expected electricity production is delayed.

NuScale – United States

Managing Risk

Compared to larger reactor projects, an SMR project can be expected to mitigate risks with shorter build periods, modular construction, and lower capital investment.

One approach to managing risk is to begin the implementation of the new technology on an initially small scale with plans to add more reactors based on the early experiences, thus seeking to build reliance in a measured manner.

Risk analysis should serve as one basis for selecting the financing approach and will identify the residual risk that must be allocated among the participants. How this is allocated will dictate the financing approach.

E. Sustainability of Commitment

Although the government has decided to pursue the deployment of SMRs, this decision needs to be sustainable from a political and public opinion perspective.

Key deployment question: ***How can the sustained commitment to SMR technology be supported as part of deployment?***

From the initial announce of interest in SMR deployment, the government needs to have a detailed and continuing public engagement process in place. The public will need to have a clear understanding of the features of SMRs that lead to the deployment decision. The overall benefits of deployment, and safety features, need to be explained throughout the deployment process.

As an important part of the commitment to the SMR technology, the government will need to assure that environmental and public safety protections are in line with the best international standards (IAEA, IFC Performance Standards and EHS Guidelines, International Conventions, OECD Common Approaches…).

Internationally recognized lending guidelines on sustainability must also be considered in the overall structuring of the project, if external financing is sought.

4.2 Breakout Sessions

Following the Moderated Scenario Session, four Breakout Sessions were convened to review and evaluate the previous discussions and address related topics. The results of the Breakout Sessions can be found in Appendix D.

Breakout Session Discussions

5. Moderated Scenario 2 Session:

Build a Plan for Deployment of a SMR Based on Limited Capital, Credit, and Infrastructure

Scenario 2 Description

General Premise

- The country addressed in the hypothetical scenario has set forth a policy supporting the development of a nuclear energy program through deployment of SMRs. It is following the IAEA Milestone Process and has completed Milestone 1, and begun work on Milestone 2.
- The government department/ministry responsible for energy policy and regulation has been charged with developing a National SMR Deployment Plan with the goal of the reactor(s) becoming operational by 2030 in order to help meet the projected growth in electric energy demand.
- The Deployment Plan must identify critical activities and optional approaches to completing those activities, and conclude with the selection of specific steps that would be taken in order to successfully deploy SMR technology to meet future energy needs. The Plan needs to identify and address (and resolve) obstacles and challenges to such deployment.
- The hypothetical country is relatively small, and is optimistically facing the challenge of both establishing the infrastructure to support a nuclear power program (following the IAEA milestone process) and addressing the many issues associated with deploying an SMR project. The country cannot internally finance the project and is seeking answers to deployment questions such as how the project might be financed, how technologies and vendors might be evaluated and selected, realistic schedule expectations, issues they need to be aware of but might not expect, etc.

Assumptions

- *Capacity*: Individual SMRs range from 35 - 300 MWe.
- *Cost*: Nominal capital cost will be $1 billion USD for a 250 MWe plant, a plant with this total capacity may involve more than one rector.
- *Modularity*: Modular construction meaning major components are designed specifically for factory fabrication, to be shipped and assembled onsite.
- *Design*: Reactor design ultimately selected has been previously deployed, it will NOT be first of a kind (FOAK). For rectors to be considered the vendor country regulatory approvals must have been obtained; reactors will have received licenses for export
- *Schedule*: Expected realistic and achievable deployment plan is to have design completed, regulatory approvals, constructed and project operational by 2030.
- *Agreements*: Necessary agreements for cooperation are in place.
- *Policy*: There is political stability and good support for the government in the host country. The national policy supporting the deployment of nuclear power, and specifically SMRs, is clear and established. The government has made its decision on deploying SMRs based on its desire for nuclear based electric power. IAEA Milestone 1 complete, and work on IAEA Milestone 2 has begun.

Scenario 2 Description
(continued)

Expected Benefits

- Potentially small initial capacities promote the consideration of future capacity expansion.
- The capital cost range for the small capacity reactors opens up opportunities for alternative financing techniques.
- Reactor capacity ranges meet the needs of countries/utilities with smaller power requirements.
- Good capacity fit for replacing coal/oil-fired plants that retire or require uneconomical environmental upgrades.
- SMR can provide back-up power for renewables.
- Robust remote site and distributed electricity applications.
- Improved economics in a carbon tax environment.

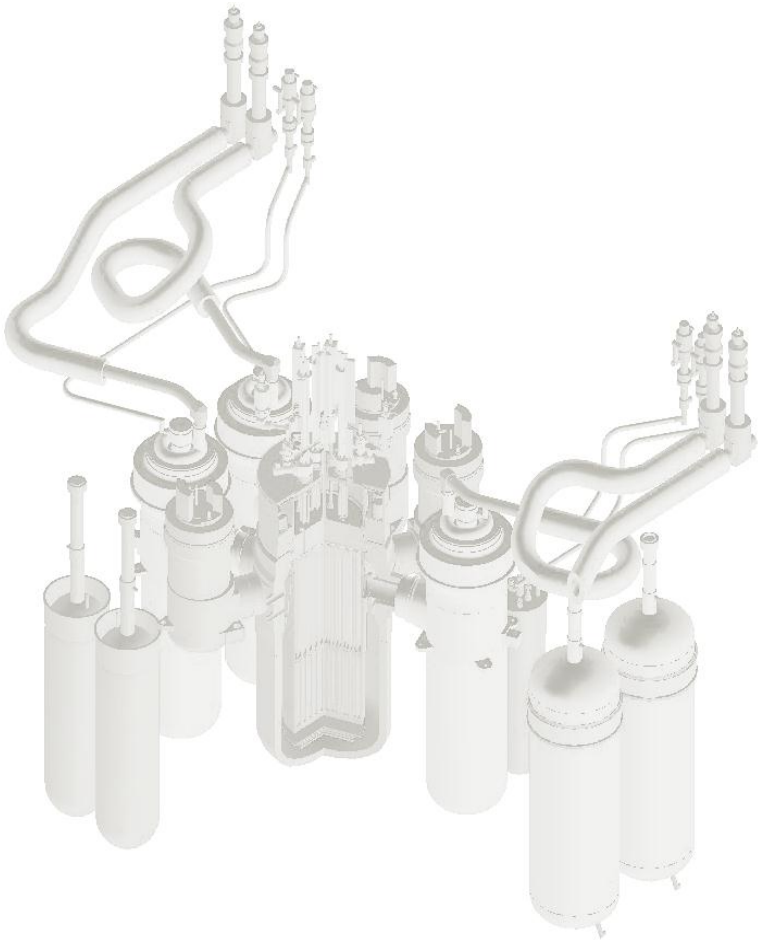

RITM Type – Russia

5.1 Scenario 2 Outcome: Keys to Deployment

The Moderated Scenario Session resulted in the following set of key deployment considerations.

A. Regulating an SMR project

The embarking country will be faced with the dual challenge of establishing an independent, effective safety regulatory and having that inexperienced regulatory function license the new SMR technology.

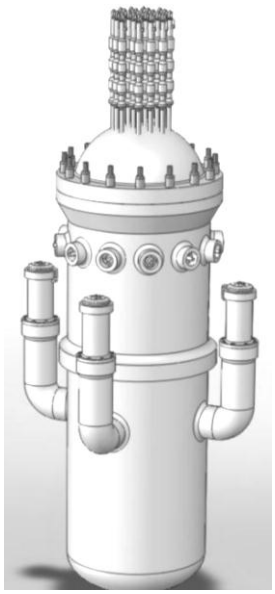

ACP100 – China

Key deployment question: ***What can the country do to prepare for this challenge?***

A nuclear safety regulatory function will need to be established in the country as has been done for the introduction of nuclear technology in many countries in the past.

Importance of Developing Robust Regulatory Process

Attracting Financing: Lenders will require that a high quality, capable regulatory function is in place. This will be a high priority in financial reviews. From a reputational risk standpoint lenders will want to have confirmation that an effective regulatory function is in place before they will lend or assume risk. This consideration will also be important for insurers.

Selecting Technology: The regulatory process will need to be interwoven with the technology selection. Technology decision needs to be made early in process in order to get the vendor and host country regulators working together to leverage resources to facilitate the development of the necessary host country regulation and technical capabilities. Certain capabilities related to the regulation of small modular reactors will still need to be developed in the host country. Getting those in place will be critical to the overall success of the project.

A licensing plan will be needed that addresses the basic regulatory approach, establishing a framework that focuses on generic designs, specific technology that has been selected, etc. The regulatory process can be expected to be much more efficient if the focus is on a specific technology. To accomplish this, a technology selection will need to be made early in the process.

From a regulatory development perspective, the focus only on SMR technology may introduce additional challenges for the host country unless other countries that have or are deploying SMRs have adequately addressed any unique issues associated with this technology. These additional challenges would be due to this technology having a relatively limited nuclear safety regulation history.
A mature electricity market regulator is important to securing the financing. The regulator needs to be seen as efficient and effective. Additionally, the host country regulator can partner with the experienced regulatory bodies in other countries, especially with the country-of-origin for the SMR.

Available Resources

There is a strong base of resources for regulatory process development that is supported by IAEA, with their milestone process and their IRRS process that evaluates the regulatory authority, and others, such as the IFNEC Infrastructure Development Working Group. This base of available resources also includes a wide range of technical support. Standing up these capabilities will be a critical first step for this country, and this exercise will assume has been sufficiently completed.

B. Financing the Project

For a country with limited resources, the financing of an SMR project can be expected to be less difficult than a large reactor, but still difficult.

Key deployment question: ***What are the approaches to financing that need to be considered and what are the issues associated with those approaches?***

Independent Power Producer Projects

It is likely that the country with limited resources in this Scenario will be looking for a possible opportunity to have an entity fund and build the project with an integrated proposal including investors, operator, and vendor. Under such a build, own, operate arrangement, the government would only need to provide the site, licensing, and some of the offsite infrastructure. The host country would expect most of the investment to come from the exporting, vendor country. The host country must decide if they want to pursue the development of a nuclear power project under whatever arrangements are possible given the situation, or if they are only interested in pursuing a build, own, operate arrangement. They may not be the same thing.

It is not clear that the investment community would look favorably on an IPP project in this situation. If they were to get involved, particularly for the construction phase, such an approach will be very expensive.

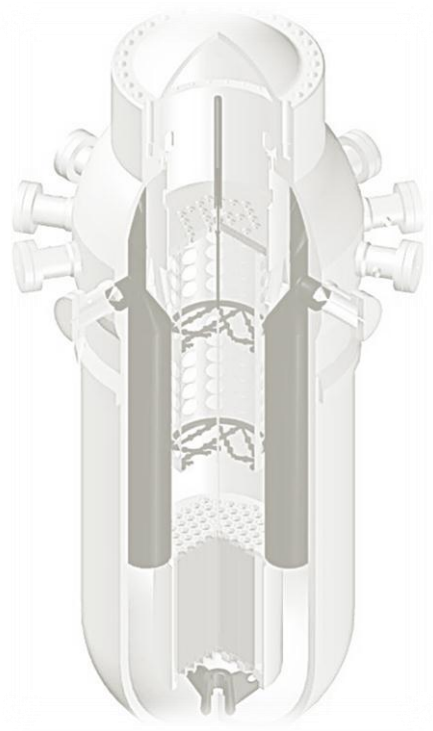

CAREM25 – Argentina

Investor Perspectives

From an investor perspective, the country should pursue vendor, export credit agency, and government to government financing arrangements to fund the construction phase where the risks are the greatest. For bank and private lenders to get involved in the construction phase, some form of government guarantees will be needed, such as those that can be provided under an export credit agency financed structure.

It is a positive consideration if the SMR is replacing high cost imported electricity or fuels, and also if the project is considered to be one of multiple projects going forward.

Along with creditworthiness (credit rating), the historical stability of national laws, the national policies, and the government of the host country will be important factors in any outside investment decisions. Essentially, finance providers will assess country risk, particularly the ease by which business can be done in a country.

Role of the Host Country

Demonstrating Economics: The host country must recognize that the economics of the project is important to export credit agencies. It will be up to the host country to demonstrate the economics of the project in order to induce the foreign developer to get involved in financing the project.

The host country will need to show that the electricity rates will support the repayment of debt and return on equity investments. Depending on the credit worthiness of the host country, commitments that assure electricity rates through a strong contract can provide an important sovereign financial backstop for the project. The key is to have a credit-worthy PPA that runs for the tenor of the initial debt, at a minimum.

Leveraging Bilateral Relationships: An economic rationale for the project may not exist, in which case the course of action is to leverage the bilateral relationship between the countries involved. In this case questions such as, "what does the host country need to give the vendor country to secure financing?", and "how can the overall deal be expanded to incentivize the vendor country to invest?" Adequate answers to these questions may be difficult given the limited resources of the host country.

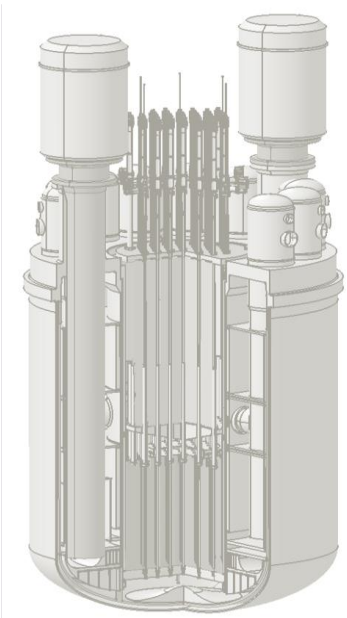

SVBR-100 – Russia

Establishing Positive Factors to Attract Financing: Given that the Scenario specifies the existence of a licensed and operating SMR in the vendor country, there are a number of positive factors that support financing: the manufacturing capability within the supply chain is in place and that helps to mitigate the construction risk, there will have been limited SMR operating experience which will to some degree address issues associated with long term performance, there is a reduced overall commitment required based on the smaller capital investment compared to a large light water reactor, and the SMR technology is expected to involve simpler operation, simpler designs compared to large reactors, and possess inherent safety features that address many accident risks. These factors make SMRs ideally suited for an emergent nuclear country with limited resources and limited capability.

Exploring Potential Financing Tools: With these positive features in mind, the host country will want to explore a package of possible financing tools. One important financing tool is the sovereign guarantee that can be critical during the higher risk period of construction through an initial period of commercial operation. Second, the feasibility of a direct country to country loan from the supplier country needs to be explored. Third, vendor financing should be considered including the potential for vendor equity investment in the project. Fourth, if there are any plans for bringing in external commercial banking lenders or public finance providers, export credit agency financing will be an important financing component. Export credit agency support will serve to provide confidence in the overall project.

Considering Phased Financing: The financing plan should seek to separate the construction phase financing from the operating phase financing. The risks and financing costs for these phases of the project are very different. Recognize that the more substantial risks of construction financing must be assumed by some party or group of parties. The project will not happen until those parties are identified. This two phase approach can reduce the overall cost of the project and the burden on the host country.

Exploring Government-to-Government Arrangements: Government to government financing arrangement are likely to be favorable to making project happen because they are often based on strategic considerations where there is not necessarily an expectation of a traditional equity return. Where there is limited capital and limited resources, one potential option is to pursue arrangements with a state owned vendor (negotiated essentially between the ministers of finance of the two countries).

C. Risk Reduction and Management

An embarking nuclear power country will have no experience from which to draw regarding the risks associated with a nuclear project.

Key deployment issue: ***What are the risks associated with an SMR project and how can the country address them?***

Establishing Clear Objectives: The host country, with little capital and resources, needs to be very clear on its objective (i.e., producing electricity by a given date) as stated to banks, vendors, contractors, insurers, etc. Adding in other objectives, such as the use of local labor and participation in the supply chain, can completely change the fundamentals of the deal. Replicate as much as possible what has already been done in the vendors other SMR projects to minimize construction risks.

Utilizing an Experienced Contractor: In this embarking country Scenario, a turnkey approach that includes a strong and experienced EPC contractor is likely to be required. The project cannot afford the interface risks associated with any other approach.

Transferring Risk: Investors in a developing country are facing unique risks that must be recognized, understood, and addressed by the host country. The host country will expect the vendor, EPC contractor, and exporting country to assume project risks (the latter being the most difficult assumption, especially in the cases where the vendor is not 100% government owned). It is appropriate for the majority of the construction risk to be borne by the vendor and EPC contractor, but not all. The vendor will be leveraging work done on their reactors elsewhere, but schedule completion risk depends partially on local conditions and thus needs to be borne to some extent by the host country.

The host country needs to understand fleet risk and how it is to be addressed. The risk assumed by the vendor or EPC contractor needs to be clear if there is an issue with the same reactor in another country.

The more the host government seeks to transfer risk onto the parties involved in the bidding, the higher will be the levelized cost of electricity produced. The higher costs of electricity can reduce opportunities

for PPAs (depending on the spot market price for electricity), which can in turn affect the ability to attract financing.

Being a Knowledgeable Customer: The host country will necessarily need to rely heavily on the foreign provider team: EPC contractor, vendor, the export government backing them, and any equity holders. However, the host government must assure it has the funds and human resources to be a knowledgeable customer. It will be passive in many aspects of the project but must still meet certain responsibilities (e.g., provide the infrastructure needed to support the project, assure that siting decisions are appropriate and acceptable, be an effective safety regulator, assure compliance with relevant treaties, and fully understand the reputational risks it is taking on in hosting a nuclear power project).

Considering Regulatory Risk: Consideration must also be given to regulatory risk, given the unpredictability of the host country regulator and what impact such unpredictability can have on the project economics, financing, and overall risk allocation.

D. Other Deployment Considerations

Availability of Credit: To be successful, there has to be credit in the deal somewhere. When analyzing a project it is important to understand where the credit is in the deal. In the Scenario presented involving a country with limited resources, the likely answer is somewhere in the government-to-government arrangement. It is up to the host country to find ways to create the credit in the deal that will make the project possible.

Fuel Management: As a newcomer country there needs to be assurance that the fuel supply is adequately arranged and that there are sufficient management systems planned for the back end of the fuel cycle. To address the fuel supply issue, the host country may want to seek a fuel leasing arrangement for the initial stages of the project if that option is offered.

Internationally Accepted Technology: The host country will want to assure that the vendor is supplying the EPC contractor with modular designs that are supported by international standards that are in compliance with applicable host country requirements.

Human Resources: The in-country human resource development needed to operate the plant will be a major challenge for the host country. It can take many years to secure the experience needed and an early focus on transition planning should be viewed as an important element of the project.

Project Effect on the Grid: The electricity market regulator will need to understand how and when the SMR project is expected to contribute to the electricity grid and how shortfalls will be accommodated if the initial schedules are delayed.

Integration of Nuclear Industry into Existing Infrastructure: Specific attention needs to be paid by the host country to understanding how this new nuclear power industry will be incorporated into the country's existing infrastructures. This will involve questions such as how government agency responsibilities will be distributed and how existing security functions will be involved and applied. Overall coordination across various government-level stakeholders will need to occur in order to endure national alignment with the host government.

As an important part of the commitment to the SMR technology, the government will need to assure that environmental and public safety protections are in line with the best international standards (IAEA, IFC Performance Standards and EHS Guidelines, International Conventions, OECD Common Approaches…).

5.2 Breakout Sessions

Following the Moderated Scenario Session, four Breakout Sessions were convened to review and evaluate the previous discussions and address related topics. The results of the Breakout Sessions can be found in Appendix D.

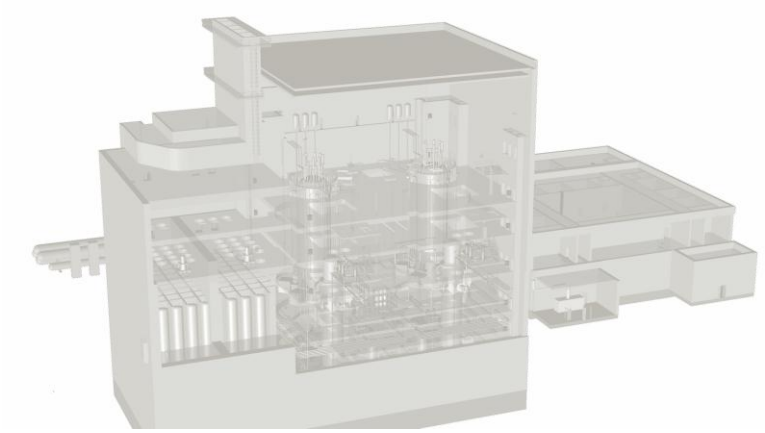

HTR-PM Project – China

6. General Findings

The following general findings regarding SMR deployment in the two Scenarios were developed at the end of the workshop and reviewed by the plenary.

Findings for Existing Reactor Markets

1. Understand the practical implications of SMR technology regarding safety regulations, national laws, international conventions, with the impact changes will have on financing, rating agencies, insurers etc. Leverage SMR benefits.
2. Clarify the economic regulatory approach, market structure (regulated vs unregulated) and in that context establish the optimum financing structure. Include as necessary firm contracts, loan guarantees, subsidies, tax credits, and applicable government participation. Recognize the balance between a "nuclear project" and the size of the investment – a key SMR benefit.
3. Establish regulatory confidence early, including design certification with strong EPC and vendor engagement. Leverage current large fleet operating experience, while maximizing SMR benefits.
4. Develop detailed risk management strategy. Identify all risks, ownership and mitigation action plans. Risks include licensing, manufacturing, supply chain, operational, financial, political, reputational, and FOAK-related technology.

NuScale – United States

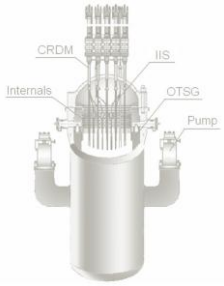

ACP100 – China

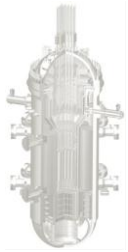

SMART – Korea

Findings for Embarking Country Markets

1. Select SMR technology as early as possible utilizing proven operating design and performance. Use international support for the tailoring of licensing and regulatory approaches to satisfy host country requirements.
2. Consider the feasibility of bilateral arrangements with countries that are capable of providing unsecured support.
3. Establish ownership and operating responsibilities. For ownership, clearly establish distribution of risk. For operations, secure experienced technical support, human resources and training.
4. If the project will be financed, develop comprehensive financing plan based on early interactions between host country, vendor, EPC, investors, insurers, and rating agencies. First, consider the critical role that host country support (guarantee) will play in establishing the feasibility of any financing approach. Determine level of financial support available from the market structure, EPC, vendor, exporting country, other partners. Recognize the balance between a "nuclear project" and the size of the investment – a key SMR benefit.

7. Acknowledgments

The IFNEC Small Modular Reactor Workshop was the result of significant creativity and contributions from nuclear energy experts in both the public and private sectors.

In addition to the presenters, expert panelists, and co-chairs that made the Workshop possible, the following members of the Workshop Planning Committee provided valuable assistance in putting the Workshop together:

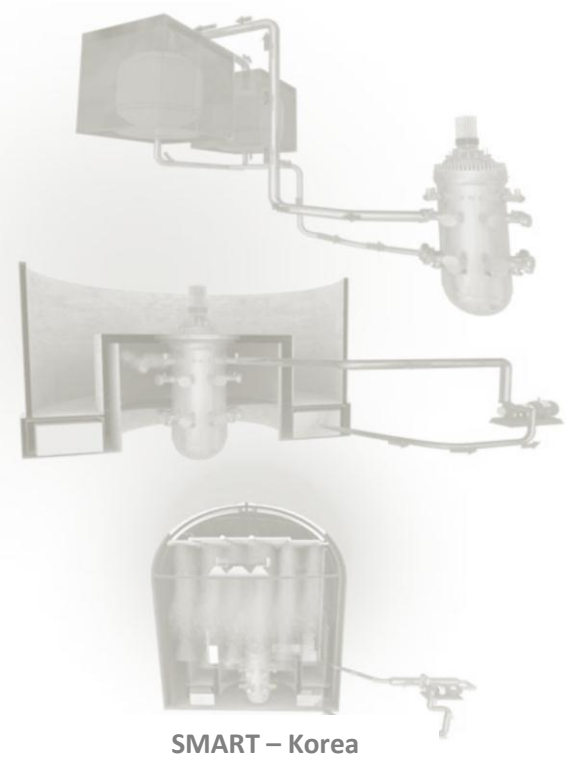

SMART – Korea

- Randa Alqudah, Jordan
- Dala Amawi, Jordan
- Dr. Kamal Araj, Jordan
- Dr. Nadira Barkatullah, UAE
- Dr. Al Burkart, Dept of State, US
- Nicole Businelli, US DOE contractor
- Facundo Deluchi, Argentina
- Aleshia Duncan, IFNEC/US DOE
- Elmer Dyke, US DOE contractor
- John Gross, US DOE
- Guillermo Koutoudjian, Argentina
- Gary Leidich, US DOE contractor
- John Mathieson, UK
- Ed McGinnis, IFNEC/US DOE
- Cheryl Moss Herman, US DOE
- Paul Murphy, US DOE contractor
- Robert Mussler, US DOE contractor
- Eyad Qutishat, Jordan
- Jad Rabadi, Jordan
- ZHANG Rui, China
- Motomitsu Sadayasu, Japan
- Alisa Trunzo, US DOE contractor
- Daniela Varela, Argentina
- Paul Warren, IAEA
- Craig Welling, US DOE

Additionally, IFNEC offers its sincerest gratitude to the Government of Jordan, specifically the Jordan Atomic Energy Commission and Chairman H.E. Khaled Toukan. Special thanks to the host of the Workshop, Dr. Kamal Araj, Vice Chairman and Commissioner for Nuclear Power Reactors, and Dala Amawi, Randah Alqudah, Jad Rabadi and Dr. Eyad Qutishat. Much of the success of the Workshop is the result of their support and assistance.

8. Appendices
Appendix A: Workshop Agenda

Small Modular Reactor Workshop:
Practical Deployment Issues and Approaches
International Framework for Nuclear Energy Cooperation
June 11-12, 2014
Mövenpick Hotel

Dead Sea, Jordan

Agenda

Introduction

A growing number of countries, including new embarking countries to nuclear technology are considering the deployment of Small Modular Reactors (SMRs), including a number of countries within the International Framework for Nuclear Energy Cooperation (IFNEC). As a complement to larger commercially available nuclear reactors, SMRs have the promise of offering important features compared to large nuclear reactors such as lower capital costs, reduced financial risk, greater flexibility to add additional capacity while concurrently generating electricity from the previous unit(s), enhanced safety features, industrial and co-generation applications (e.g., desalinization, process heat), greater compatibility for electricity markets with limited electricity grids, modular fabrication processes that significantly reduce onsite component assembly and associated quality assurance demands, and off-grid and remote electricity generation needs. For the purpose of this Workshop, the focus will be on reactors with a nominal output of 300 MWe or less and are projected to be ready for commercial deployment within the next 15 years.

Objectives of the Workshop

The goal of this Workshop is to gain a better understanding from a utility, national energy planning authority, regulatory authority, and Nuclear Energy Program Implementation Organization (NEPIO) perspective of the expected activities and issues associated with the deployment of SMRs. The Workshop will address how SMRs could be deployed in markets represented by the countries of IFNEC, including countries seeking to use nuclear energy for the first time. This includes those with limited infrastructure and resources that have relatively small electric grids and insufficient capital to finance deployment of medium and large-sized reactors. To do this, the Workshop will take an enterprise-wide approach by convening a broad spectrum of stakeholders and experts who would play key roles in developing successful SMR deployment plans (e.g., vendors, utilities, export credit agencies, insurers, nuclear safety and security regulators, market regulators, insurers, rating agencies, energy planning authorities/NEPIOs, technical and market consultants). These experts will identify and consider various SMR deployment options and approaches.

In addition to representatives from IFNEC member countries, multilateral development banks, international organizations such as the International Atomic Energy Agency (IAEA) and Nuclear Energy Agency (NEA), as well as international professional entities such as the World Nuclear Association and the World Association of Nuclear Operators (WANO) have also been invited.

Take Away

An important part of the Workshop will be to gain an understanding of what the "bottom lines" are for each of the key stakeholder groups when considering the deployment of SMRs: What are the issues and what are the approaches to addressing them?

Day 1, June 11, 2014

8:00 – 9:00 **Registration/Networking**

9:00 – 9:30 **Welcome and Opening Remarks (Auditorium)**

- Welcome and Purpose of Workshop
  Steering Group Chair Ed McGinnis Welcome
- Remarks by Chairman of the Jordan Atomic Energy Commission
  H.E. Khaled Toukan
- Keynote by Minister of Energy and Mineral Resources
  H.E. Dr. Mohammed Hamed

9:30 – 10:00 **Group Photo on the Grand Staircase and Break** (Photo Includes All Workshop Participants)

10:00 – 10:15 **Workshop Objectives and Scene-Setter for Workshop:** Ed McGinnis, IFNEC Steering Group Chair; Gary Leidich, SMR Workshop Moderator

This discussion will go over how the workshop will proceed, clarifying the opportunities for participation by the attendees, and outlining the specific outcomes and objectives. The moderator will explain the Scenario discussion Session and the role of the expert role players. The importance of the attendees' active participation in the Breakout Sessions will be emphasized.

10:15 – 10:40 **Global Nuclear Reactor Market State of Play**: Hadid Subki, IAEA

- SMR Status: Summary discussion of SMR development, spectrum of different approaches being developed, expected feature to be offered, timing of availability projections, etc.
- Description of potential advantages of SMRs compared with larger reactors.
- Status: Summary of current suppliers, current and emerging customer markets, key customer market needs, key barriers/challenges to deployment (e.g., availability of equity and debt financing, limited reactor selections size-wise/lack of proven and licensed smaller reactors as an option, perceived risks by investors and planning authorities, etc.).

10:40 – 11:00 **Financing of Small Modular Reactors:** Paul Murphy, Special Counsel, Milbank, Tweed, Hadley & McCloy, LLP: Summary of findings relevant to SMRs from the previous IFNEC Finance Workshops held in London and Abu Dhabi, and the Special Finance Session presented to the IFNEC Steering Group in Bucharest, Romania, held on May 9, 2014.

11:00 – 12:00 **National Market Perspectives Regarding SMRs**

Representatives from four countries will discuss their different interests and perspectives on the deployment of SMRs in their countries. These presentations are expected to demonstrate the wide range of applications for SMRs that are being considered.

- Dr. Kamal Araj, Jordan
- Dr. Pete Lyons, U.S.
- Dr. Maher Alodan, King Abdullah City for Nuclear and Renewable Energy, Saudi Arabia

12:00 – 1:30 **Lunch**

1:30 – 3:00 **Moderated Interactive Scenario Session #1: Build a Plan for Deployment of a SMR Based on Substantial Capital, Credit, and Infrastructure (Grand Ballroom) -** A hypothetical Scenario involving a country with an established nuclear power program and substantial capital and infrastructure will be analysed by a stakeholder/expert panel with respect to SMR deployment. Issues and approaches to the deployment of SMR technology in the country will be identified and discussed with the objective of reaching bottom line conclusions for deployment. The underlying assumption will be that the country has concluded that it will pursue the deployment of SMRs. They are interested in early deployment and therefore willing to consider vendor models that are in the early stages of deployment. The moderator will guide the discussions of experts playing stakeholder roles as they work to build a viable plan to deploy an SMR. The experts will be collectively challenged by the moderator to identify, from each perspective, what it will take for a successful deployment.

Horse shoe table with role players:

- Moderator: Gary Leidich
- Utility: Shah Nawaz Ahmad, WNA
- Energy Planning Authority: Pete Lyons, U.S. DOE
- Vendor: Suhn Choi, SMART
- Commercial Banker: Jim Asselstine
- Rating Agency: Andrew Steel, Fitch
- ECA: Youngkee Kim, The Export-Import Bank of Korea
- Legal Consultant: George Borovas, Shearman and Sterling
- Insurer: Paul Holliday, Marsh Limited, London
- EPC: Alexander Zbiorczyk, CB&I Power
- Safety & Security Regulator: Stewart Magruder, U.S. NRC
- Electricity Market Regulatory: Nadira Barkatullah, RSB, UAE
- Host Country Strategic Advisor: Paul Murphy, Milbank, Tweed, Hadley & McCloy, LLP

3:30 – 4:00 **Break**

4:00 – 5:00 **Breakout Session 1: Workshop attendees will be divided into 4 groups of approximately 20 each to participate in Breakout Sessions led by subject matter experts.**

- Breakout Session 1: Evaluation of Scenario Session 1
    - Co-Chair: Jack Edlow
    - Co-Chair: Hadid Subki
- Breakout Session 2: Evaluation of Scenario Session 1
    - Co-Chair: Claire Harvey
    - Co-Chair: Fiona Reilly

- Breakout Session 3: Applicability of Safety Conventions and IAEA Guidance to SMRs
  - Co-Chair: Al Burkart
  - Co-Chair: Pete Wells
- Breakout Session 4: Fuel Cycle and Waste Management Issues
  - Co-Chair: John Mathieson
  - Co-Chair: Keith Miller

5:00 – 5:30 **Breakout Session reports provided by Chairs, led by Moderator**

5:30 – 5:45 **Wrap-up of Day 1/Preview of Day 2: Chair and Moderator**

5:45 – 5:50 **Closing Remarks from Host, Dr. Kamal Araj**

7:30 – 9:30 **Gala Dinner**

Day 2, June, 12, 2014

8:30 – 8:40 **Opening Remarks from Host, Dr. Kamal Araj**

8:30 – 10:10 **Small Modular Reactor Descriptions – Facilitated by Workshop Moderator (Auditorium)**

A ten minute description of their SMR design will be provided by each vendor. The vendors will be asked to address a specific list of questions regarding the development of their particular technology. The presentations are intended to provide the attendees with an overview of the various approaches to SMR design.

- Presentation A – NuScale, U.S., Christopher Colbert
- Presentation B – SMART, Korea, Suhn Choi
- Presentation C – CAREM, Osvaldo Calzetta, Argentina
- Presentation D – OKBM/KLT40S, Milko Kovachev, Russia
- Presentation E – ACP100, Bin Xu, China
- Presentation F – GTHTR300, Dr. Xing L. Yan, Japan
- Presentation G – AKME/SVBR-100, Russia
- Presentation H – INET/HTR-PM, China, Zheng Jianfeng

10:10 – 10:30 **Break**

10:30 – 12:00 **Moderated Interactive Scenario Session #2: Build a Plan for Deployment of an SMR Based on Limited Capital, Credit and Infrastructure (Grand Ballroom) -** A hypothetical Scenario involving a country embarking on a nuclear power program with limited capital and infrastructure will be analysed by a stakeholder/expert panel with respect to SMR deployment. Issues and approaches to the deployment of SMR technology in the country will be identified and discussed with the objective of reaching bottom line conclusions for deployment. The underlying assumption will be that the country has followed an approach similar to the IAEA Milestone Process and has concluded that they will pursue the deployment of SMRs. The country is only interested in deploying a design that has a reference plant already built and operating. The moderator will guide the discussions of experts playing stakeholder roles as they work to build a viable plan to deploy an SMR project. The experts will be collectively challenged by the moderator to identify, from each perspective, what it will take for a successful deployment.

Horse shoe table with role players:

- Moderator: Gary Leidich
- Utility: Khaled Waleedi, NEPCO
- Energy Planning Authority: Dr. Kamal Araj, JAEC
- Vendor: Christopher Colbert, NuScale
- Commercial Banker: Jim Asselstine
- Rating Agency: Andrew Steel, Fitch
- ECA: Régine Schapiro, COFACE
- Legal Consultant: George Borovas, Shearman and Sterling
- EPC: Alexander Zbiorczyk, CB&I Power
- Insurer: Paul Holliday, Marsh Limited, London
- Safety & Security Regulator: Stewart Magruder, U.S. NRC
- Electricity Market Regulatory: Nadira Barkatullah, RSB, UAE
- Host Country Strategic Advisor: Paul Murphy, Milbank, Tweed, Hadley & McCloy, LLP

12:00 – 1:30 **Lunch**

1:30 – 2:30 **Breakout Session 2: Workshop attendees will be divided into 4 groups of approximately 20 each and will participate in Breakout Sessions led by subject matter experts. (Break-out Rooms TBD).**

- Breakout Session 1: Evaluation of Scenario Session 2
  - Co-Chair: Hadid Subki
  - Co-Chair: Jack Edlow
- Breakout Session 2: Evaluation of Scenario Session 2
  - Co-Chair: Fiona Reilly
  - Co-Chair: Claire Harvey
- Breakout Session 3: Applicability of Safety Conventions and IAEA Guidance to SMRs
  - Co-Chair: Al Burkart
  - Co-Chair: Pete Wells
- Breakout Session 4: Fuel Cycle and Waste Management Issues
  - Co-Chair: John Mathieson
  - Co-Chair: Keith Miller

2:30 – 3:00 **Breakout Session group reports provided by Chairs, led by Moderator**

3:00 – 3:30 **Break**

3:30 – 4:30 **Plenary Session and Summary of Findings/Recommendations and Conclusions**

- Co-Chairs Report on their answers/findings
- Moderator and Chair facilitate development of summary findings.

4:30 – 5:00 **Wrap up by Steering Group Chair and Moderator**

Appendix B: Speaker Biographies

Speaker and Expert Biographies

Mr. Shah Nawaz AHMAD

Senior Adviser, World Nuclear Association (WNA), London

Mr. Shah Nawaz Ahmad is currently Senior Adviser at the World Nuclear Association (WNA) in London. He is a graduate in Electrical Engineering and has post-graduate qualifications in Nuclear Engineering as well as Systems Management.
Mr. Ahmad has more than 47 years of hand-on experience in the nuclear power sector. He has worked at the national and international levels in the areas of policy and planning, management, safety, design, EPC contracting and construction, commissioning, operations and maintenance, supply chain, public awareness, training, business development and international cooperation.
Mr. Ahmad has held senior positions with the Nuclear Power Corporation of India Ltd (NPCIL), Electronics Corporation of India Ltd (ECIL), and World Association of Nuclear Operators (WANO) Tokyo. He has also worked for the International Atomic Energy Agency (IAEA) and Atomic Energy of Canada Ltd (AECL). Additionally, Mr. Ahmad has provided consultancy to several national and international consultants and infrastructure businesses.

Mr. Ahmad has published a large number of technical papers and contributed toward and edited a significant number of national and international reports. He has also travelled and lectured widely in India and abroad.

Dr. Maher ALODAN

Director of Research and Development and Innovation, King Abdullah City for Atomic and Renewable Energy

Dr. Maher Alodan obtained his Ph.D. in 1996 from the University of Minnesota in the USA in Chemical Engineering. Currently, Dr. Alodan is working as a Director of Research and Development and Innovation at the King Abdullah City for Atomic and Renewable Energy. Dr. Alodan was working at Alfaisal University from 2006 until 2010 as Vice President for Research and Graduate Studies and acting Dean of Engineering. He also held the position of Acting Vice President for Advancement. Previously he held the position of Director of the Center of Excellence for Research in Engineering Materials (CEREM) at King Saud University in Riyadh, where he was an Associate Professor on the faculty of Chemical Engineering. Dr. Maher worked as a Senior Advisory Development Engineer at Seagate Technology in the USA from 1997 to 2000.
Dr. Alodan has published extensively with more than 50 refereed papers, conference papers, and patents to his credit. His research interests are in the areas of electrochemical modeling of transient systems, characterization of electrochemical systems using DC and AC techniques, and control and prevention of corrosion.

In 2006, Dr. Alodan was awarded the King Abdulaziz Medal of First Degree given by the Custodian of the Two Holy Mosques, King Abdullah bin Abdulaziz, for patent and technology achievement.

Dr. Kamal J. ARAJ

Vice Chairman & Commissioner for Nuclear Power Reactors, Jordan Atomic Energy Commission

Dr. Kamal Araj is responsible for all international cooperation agreements and activities and serves as liaison to the IAEA and other international organizations. He is also the project manager for the Jordan Nuclear Power Plant. Prior to his current role, Dr. Araj served as the Government Advisor for Nuclear Energy and the scientific advisor for King Abdullah Development Bureau (KADDB). Prior to 2006, Dr. Araj worked as a senior policy and planning advisor at the IAEA in Vienna for five years. Prior to that, Dr. Araj was an international consultant in energy and advanced technology in Washington, DC. His clients included RCG/Hagler, Bailly, Inc., XERAD, Inc., the BDM Corporation, Argonne National Laboratory, and the U.S. ACDA.

Dr. Araj held academic and research appointments at the Massachusetts Institute of Technology (MIT), Harvard University, Brookhaven National Laboratory and the U.S. National Academy of Sciences. Dr. Araj received his B.S. in physics and B.S.E. in nuclear engineering from the University of Michigan, Ann Arbor. He obtained his Ph.D. at MIT in nuclear engineering with a minor in energy technology and policy.

Not Pictured.

Mr. James K. ASSELSTINE

Mr. Asselstine retired in 2013 after a 40-year career in government and the financial services industry. Mr. Asselstine served as Managing Director with Lehman Brothers and Barclays for 25 years, where he was a senior fixed income research analyst covering the electric power industry. In this capacity, he provided research coverage for a broad variety of corporate and project finance debt financings for U.S. and international electric utilities and independent power projects.

Mr. Asselstine served as a Commissioner on the U.S. Nuclear Regulatory Commission from 1982 to 1987. From 1978 to 1982, he served as Associate Counsel for the U.S. Senate Committee on Environment and Public Works. While on the staff of the committee, Mr. Asselstine also served as a Co-Director of the committee's investigation of the Three Mile Island nuclear power plant accident. From 1977 to 1978 and from 1973 to 1975, Mr. Asselstine served as a Staff Attorney with the U.S. Nuclear Regulatory Commission, and from 1975 to 1977, he served as Assistant Counsel for the Joint Committee on Atomic Energy of the U.S. Congress.

Mr. Asselstine holds a B.A. degree in Political Science from Virginia Polytechnic Institute, and a J.D. degree from the University of Virginia.

Dr. Nadira BARKATULLAH

Director of Economic Regulation, Regulation & Supervision Bureau, Abu Dhabi

Dr. Nadira Barkatullah is a specialist economist in infrastructure financing and regulated utility industries. She has more than 15 years of experience applying economic concepts and conducting quantitative analysis, advising both governments and major organizations around the globe. While at the IAEA, Dr. Barkatullah worked on financing and investment analysis of capital intensive infrastructure projects and energy and sustainable development issues. She represented the IAEA at various expert advisory committees, such as the OECD Working Party on Nuclear Energy Economics.
Prior to joining the IAEA, Dr. Barkatullah was Divisional Director of London Economics' international utilities practice and their associate practice for the Asia Pacific region. She led local and international projects in the infrastructure industries on issues including cost of capital analysis, evaluations of various funding options, tariff design, market reform, efficiency analysis, market performance, third party access, competition, and liberalization. She also served as Senior Manager for KPMG Australia, ACIL Consulting, and Sydney Water and Energy Australia.

Dr. Barkatullah has a Masters in Economics from Carnegie Mellon University and a PhD in Economics from the University of Sydney, Australia.

Mr. George BOROVAS

Head of Global Nuclear, Shearman & Sterling, LLP

Mr. Borovas is a Partner and head of Pillsbury's International Nuclear Projects team.
Mr. Borovas concentrates his practice on the development and financing of new nuclear power plants. He has recent experience advising governments on the development of civilian nuclear power programs and the construction of new nuclear power plants. He regularly negotiates contracts and advises clients on the establishment of global joint ventures relating to the nuclear industry as well as on transactions for the trading of fuel, equipment and services for nuclear power plants. He advises companies on international nuclear liability and export compliance issues and has represented buyers in transactions involving the acquisition of nuclear power plants.
He has worked on nuclear projects and transactions in the U.K., the U.S., Europe, the Middle East, Japan, South Korea, Southeast Asia, China, Russia and South Africa.

Before becoming a nuclear energy lawyer, Mr. Borovas worked as an engineer for a nuclear power plant engineering firm.

Dr. Alex BURKART

Deputy Director, Office of Nuclear Energy, Safety and Security, Bureau of International Security and Nonproliferation, U.S. Department of State

Dr. Alex Burkart has been with the U.S. Government for more than 35 years in a variety of positions related to nuclear weapons, nuclear energy, and nuclear nonproliferation. His current areas of focus are international nuclear cooperation, proliferation resistance, and advanced nuclear technologies.
Dr. Burkart serves as Co-Chairman of the Infrastructure Development Working Group of IFNEC and is a member of the IAEA's Technical Working Group on Nuclear Power Infrastructure. He is also a member of the American Nuclear Society and has served on the Special Committee on Nuclear Nonproliferation and the International Committee.

Dr. Burkart has a B.S. and a Ph.D. in Nuclear Engineering from North Carolina State University. He is a Distinguished Graduate of the Industrial College of the Armed Forces and a licensed Professional Engineer in the State of Virginia.

Mr. Osvaldo CALZETTA

Project Manager of the CAREM Project, National Atomic Commission of Argentina (CNEA)

Mr. Osvaldo Calzetta is responsible for the CAREM Project at the National Atomic Commission of Argentina. From 2008 to April 2012, Mr. Calzetta was Planning and Evaluation Officer for the Brazilian-Argentine Agency for Accounting and Control of Nuclear Material (ABACC). From 1986 to 2007, he was the reactor manager of the RA-6 reactor in Bariloche, Argentina. During this time, he also served as Professor of the Nuclear Engineer Career at the Balseiro Institute of the National University of Cuyo, Argentina.
Mr. Calzetta was also in charge of the start-up of the NUR reactor (Algerie) and of the start-up of the ETRR II reactor (Egypt). He acted as an advisor for INVAP SE during the start-up of the OPAL reactor (Australia).

Mr. Calzetta holds a master´s degree in Physics from the National University of Buenos Aires (1978) and is a postgraduate in nuclear engineering from the same University (1981).

Mr. Suhn CHOI

Vice President, Small Reactor Development, Korea Atomic Energy Research Institute

Mr. Suhn Choi brings more than 30 years of R&D and management experience at the Korea Atomic Energy Research Institute to his position as Vice President of Small Reactors Development. He leads KAERI's efforts to develop, design, and verify technologies related to new small water cooled reactors.
Mr. Choi played a key role as a division director of the Standard Design Approval program for Korean integral pressurized water reactor, SMART. With his efforts, SMART successfully received its SDA from the Korean regulatory agency in July 2012 and is pursuing its first deployment. Mr. Choi spent years as an expert in mechanical systems for APR-1400, OPR-1000, and other Korean nuclear self-reliance programs.

Mr. Choi earned a master's degree and completed coursework for a Ph.D. in Mechanical Engineering from Seoul National University. He is a member of ASME, KSME, and Korea Nuclear Society.

Mr. Jack EDLOW

President, Edlow International

Mr. Edlow has worked in the nuclear industry since 1969 and has become one of the premier experts in the field of transport logistics of radioactive materials. He is President of Edlow International Company. Mr. Edlow has served on numerous boards including World Nuclear Association, Nuclear Energy Institute, and U.S. Nuclear Infrastructure Council. He also has served as Chairman of the IAEA Steering Group on Shipment Denial. Mr. Edlow regularly speaks at industry events and lectures at the World Nuclear University. He was actively involved in the 2010, 2012, and 2014 Nuclear Security Summit Business events. He is also chairman of the NIS 2016 Board of Advisors.

Mr. Edlow was appointed to the Department of Commerce Civil Nuclear Trade Advisory Commission in 2010 and is currently the Chairman. He was also appointed to the Trade Advisory Commission on Africa in 2006 and as its Chairman in 2010 and again in 2014.

Dr. Mohammad HAMED

Minister of Energy and Mineral Resources, Jordan

Dr. Mohammad Hamed is a U.S. graduate with more than 25 years of solid and professional experience in Energy and Renewable Energy, Regulation and the Creation of Regulatory Entities, Investment Policy Settings, Privatization and Public Private Partnership (PPP) schemes, Strategic Planning, Public Sector Reform, and Organizational Change. His experience covers a range of expertise, including private sector development, Infrastructure planning and design, economic growth and econometric modeling, the designing of technical assistance programs, and developing operations guide for public regulatory bodies and compliance monitoring and enforcement procedures.
He has been involved in the design of a number of EU projects aimed at developing the PPPs structure in Jordan. He has worked with international agencies like the EU, World Bank, DFID and international consulting firms. Currently, Dr. Hamed is the Minister of Energy and Mineral Resources. He was appointed as the Chief Commissioner and CEO of ERC in September of 2012. Prior to that he worked as Strategic Analysis Manager at the Royal Court and International consultant for EU funded projects.

He is married, with three lovely daughters and two amazing sons.

Ms. Claire HARVEY

Senior Solicitor, Prospect Law Ltd

Ms. Claire Harvey joined Prospect Law from the U.S. firm Squire Sanders Hammond. She was formerly head of legal at United Kingdom NIREX Limited (formerly the Nuclear Industry Radioactive Waste Executive). Ms. Harvey has specializes in domestic and international Nuclear Regulatory Law, including the transport and storage of radioactive substances. She has vast experience advising on the regulatory aspects of Nuclear New Build (including the NPS) and nuclear supply contracts, and advising Tier 1 contractors in Nuclear Decommissioning.

Ms. Harvey also advises on International Law and the application of International Treaties, including Nuclear Liability Conventions. She has presented at International Nuclear Lawyers (INLA) Congress, and industry and intergovernmental meetings. She is also a member of the International Nuclear Law Association and the Nuclear Institute (management committees). Ms. Harvey works with INLA, the Nuclear Industry Association, the World Nuclear Association, Ciria, and UKELA.

Not pictured.

Mr. Zheng JIANFENG

Program Officer, National Energy Administration, China

Mr. Zheng Jianfeng is the Program Officer in charge of nuclear power industry management for the National Energy Administration. Prior to this, he served as Director, in charge of licensing for Shandong Nuclear Power Company from 2009 to 2012. From 2005 to 2009, he worked as a Special Engineer for design/engineering, also with Shandong Nuclear Power Company. From 2004 to 2005, he attended Nuclear Power management training course in Shanghai senior training center of CPI. From 1998 to 2004, he was in charge of network management at Fujian Shaxikou Power Plant.

Mr. Jianfeng earned his Bachelor's degree at HEHAI University, majoring in Use of Hydro Power.

Mr. YoungKee KIM

Director General, Nuclear Power Plant Financing Office, The Export-Import Bank of Korea (KEXIM)

Mr. YoungKee KIM joined KEXIM in 1988 and worked mainly in the export credit and development finance areas of the Bank. In recent years, he has been working intensively in power sector, ranging from conventional power, hydro, and nuclear power plants. He served as Director of Conventional Power Team and Nuclear Power Plant Team prior to his current position at KEXIM. As team Director, he successfully achieved financial closure for various IPPs in UAE, KSA, Morocco, Indonesia, Pakistan, and Mexico.
Mr. Kim was also responsible for international development cooperation while working at the Economic Development Cooperation Fund entrusted by the Korean Government Group of the Bank. During his assignment, he contributed to expanding cooperation with MDBs through co-financing and Korean Trust Funds.

He holds a Ph.D. from the Kyung Hee University in Korea and an MBA in international business from Thunderbird in the United States. He studied civil engineering at Chung Ang University in Korea.

Mr. Gary R. LEIDICH

President, Gary Leidich LLC

Mr. Gary Leidich retired from FirstEnergy at the end of 2011, where he served as Executive Vice President of FirstEnergy Corporation and President of the FirstEnergy Generation Company.
Mr. Leidich began his career with the Cleveland Electric Illuminating Company in 1974 holding various positions from 1975 to 1986, including Manager of Construction Engineer and Manager of the Preoperational Test Program. He then moved to the Centerior Energy corporate office, serving as Director of System Planning, Director of Human Resources, Vice President of Finance and Administration, and CFO and President of Generation.
In 1998, Gary became Executive Vice President at the Institute of Nuclear Power Operations, where his responsibilities included plant evaluations and assistance programs. He rejoined FirstEnergy in 2002 and was named Chief Nuclear Officer in 2003. In 2008, he was named President of FirstEnergy Generation. He had overall responsibility for the 26,000 MWe Generation Fleet, including its unregulated retail subsidiary.
Mr. Leidich received his BSEE and MSES from the University of Toledo, where he received the Distinguished Alumni Award from the College of Engineering. He completed the Public Utilities Executive program from the University of Michigan in 1998 and was an instructor for the Reactor Technology Program at MIT.

He is Chairman of the Board of the Western Electricity Coordinating Council (WECC) and serves on the Quality Committee of the Summa Health Care Board in Akron and the University of Toledo Foundation Board (as Vice-Chair). He is a member of ANS and IEEE and a registered PE in Ohio.

Dr. Peter B. LYONS

Assistant Secretary for Nuclear Energy, Office of Nuclear Energy, U.S. Department of Energy

Dr. Peter B. Lyons is the U.S. Assistant Secretary for Nuclear Energy. Under Dr. Lyons' leadership, the Office is incorporating modeling and simulation into all programs through the Nuclear Energy Advanced Modeling and Simulation program and the Energy Innovation Hub. He also contributed to the development of the Administration's Strategy for the Management and Disposal of Used Nuclear Fuel and High-Level Radioactive Waste, and has worked to establish the Small Modular Reactor Licensing Technical Support program for a new generation of safe, reliable, low-carbon nuclear energy technology. He championed the Nuclear Energy University Program, which has successfully supported U.S. universities in preparing the next generation of nuclear engineering leaders.
Prior to joining DOE, Dr. Lyons served as a Commissioner of the NRC, where he focused on safety of operating reactors and improving partnerships with international regulatory agencies. From 1997 to 2005, he served as Science Advisor on the staff of U.S. Senator Pete Domenici and the Senate Committee on Energy and Natural Resources. From 1969 to 1996, he worked at Los Alamos National Laboratory as Director for Industrial Partnerships, Deputy Associate Director for Energy and Environment, and Deputy Associate Director-Defense Research and Applications.

Dr. Lyons has published more than 100 technical papers and holds 3 patents. He received his doctorate in nuclear astrophysics from the California Institute of Technology and his undergraduate degree in physics and mathematics from the University of Arizona. Dr. Lyons is a Fellow of the American Nuclear Society and the American Physical Society.

Mr. Stewart L. MAGRUDER

Branch Chief, U.S. Nuclear Regulatory Commission

Mr. Magruder is the Chief of the Small Modular Reactors (SMR) Licensing Branch 1 in the Office of New Reactors of the NRC. His responsibilities include developing the regulatory infrastructure for expected applications related to the design, construction, and operation of SMRs. He joined the NRC in 1989 as an inspector in the Vendor Inspection Branch in the Office of Nuclear Reactor Regulation. He has served as the Deputy Director of the Office of Enforcement, Chief of the MOX Branch in the Office of Nuclear Material Safety and Safeguards, and a project manager for several activities in NRR including risk-informed initiatives, the ABB-CE System 80+ design certification, the CE Owners Group, and the Nuclear Energy Institute.
Prior to joining the NRC, Mr. Magruder was a U.S. Navy Nuclear Submarine Officer and a mechanical design engineer for Westinghouse Electric Corporation.

Mr. Magruder received a Bachelor of Science degree in Mechanical Engineering from Cornell University and a Master of Business Administration degree from Johns Hopkins University.

Mr. John MATHIESON

Head of International Relations, UK Nuclear Decommissioning Authority (NDA)

Mr. John Mathieson is the Head of International Relations with the UK's Nuclear Decommissioning Authority accountable for developing and implementing its international relations strategy. He is responsible for understanding the nuclear power and radioactive waste management policies and programmes in other countries, identifying opportunities for technical co-operation, and managing relationships with counterpart organizations such as the US-DOE.
Mr. Mathieson is Co-Chair of the Infrastructure Development Working Group of IFNEC. He also works closely with the IAEA and OECD/NEA, participating in a number of expert missions, technical meetings, and working groups. He is the UK representative on the European Union's Club of Waste Management Agencies. He has worked with other EU nuclear and radioactive waste management organizations in assisting the governments of many Central and Eastern European countries, as well as Russia and Ukraine, to further develop their financing, decommissioning, and radioactive waste management strategies. Mr. Mathieson is also a Board Director and Secretary of Waste Management Symposia Inc.

Before joining the NDA in 2007, Mr. Mathieson worked with Nirex for 17 years in several roles, including business development and international relations. Prior to that he was with CEGB/Nuclear Electric (now EdF Energy) for 14 years as a health physicist.

Mr. Edward MCGINNIS

Deputy Assistant Secretary, International Nuclear Energy Policy And Cooperation, Office of Nuclear Energy, U.S. Department of Energy

Mr. Edward McGinnis is responsible for the Department of Energy's international civilian nuclear energy activities, including international nuclear energy research, development, and demonstration cooperation; international framework and partnership development; and international nuclear energy policy. Mr. McGinnis serves as Steering Group Chairman of IFNEC, as well as the Departmental Representative to the U.S. Trade and Promotion Coordination Committee on civil nuclear energy matters. Within the Office of Nuclear Energy, he has also served as a Vice Chairman and Principal U.S. Representative to the Generation IV International Forum and was responsible for U.S. domestic nuclear fuel assurance matters.
Prior to working in the Office of Nuclear Energy, Mr. McGinnis led a number of other high priority initiatives at the Department of Energy, including serving as the senior Director for the office of Global Radiological Threat Reduction. Mr. McGinnis also served as senior advisor and special assistant to four Assistant Secretaries and Deputy Administrators for nonproliferation and national security.

Mr. McGinnis holds a master's degree from American University's School of International Service in Washington, DC, and is a graduate of the Kennedy School's Senior Executive Fellows Program as well as the Program for Senior Executives in National and International Security at Harvard University.

Mr. Keith MILLER

Head of Marketing, Strategy & Business Development, UK's National Nuclear Laboratory

Mr. Keith Miller is a Chartered Engineer with a BSc (Honours) in Mechanical Engineering from Liverpool University and a Fellow of the Institution of Mechanical Engineers. He joined BNFL in 1983 as a Management Trainee and is currently Head of Marketing in Strategy & Business Development. He is involved in a broad range of projects, from developing relationships with key Governmental Departments (UK Trade and Investment, Business, Innovation and Skills and Office for Nuclear Development) to fostering links with international organisations (Waste Management Symposia) and positioning/publicising NNL in the USA, Middle East, Central and Eastern Europe, and Asian markets.
He is actively involved with the Nuclear Industry Association through their Nuclear Exports and Decommissioning Working Groups. Mr. Miller is also a member of the Programme Advisory Committee (PAC) for the major international Waste Management series of conferences a Track 2 Co-Chair (High Level Waste and Spent Nuclear Fuel) and manages the NNL's tri-lateral relationship with the U.S. DOE and the UK's Nuclear Decommissioning Authority (NDA).

Keith currently manages a team capable of undertaking a range of activities relating to Market Environment and Entry Strategies, and Capture Plans, Competitor (Partner/Alliances) and Customer Intelligence, Promotional Materials and Technology Foresight.

Mr. Paul MURPHY

Special Counsel, Milbank, Tweed, Hadley & McCloy LLP

Mr. Paul Murphy's focuses on multiple aspects of the nuclear industry, including legal and policy matters such as international regulatory and treaty frameworks and issues regarding nuclear liability, as well as strategies for creating viable nuclear power programs and the identification and mitigation of associated risks. Mr. Murphy represents developers/owners, investors, and contractors on nuclear projects internationally.
Mr. Murphy is recognized as an expert in the development and financing of nuclear power programs by the IAEA, OECD's Nuclear Energy Agency (NEA), and the U.S. government. Mr. Murphy currently serves on the IAEA's Technical Cooperation Program team, which assists member states in developing civilian nuclear power programs. Mr. Murphy has served as a designated expert, chairman, and author at several special meetings and for multiple working groups of the IAEA, primarily involving the development, financing, and structuring of nuclear power projects.

Mr. Murphy currently serves as a two-time appointee to the U.S. Secretary of Commerce's Civilian Nuclear Trade Advisory Committee and has chaired its Finance subcommittee for the last two years.

Ms. Fiona REILLY

PwC, Capital Projects and Infrastructure – Nuclear Lead

Ms. Fiona Reilly is responsible for leading the nuclear team in PwC's global Capital Projects and Infrastructure Team. She is a highly regarded international nuclear specialist having worked in the industry for nearly 20 years. She is recognised as an expert in the development and financing of nuclear projects by the International Atomic Energy Agency (IAEA) and has served as a designated expert on the financing, development, and structuring of nuclear projects at special meetings of the IAEA.

She has worked on all aspects of the nuclear cycle from new build and licensing to decommissioning, fuel storage, and waste management. She has also worked on construction, operation, decommissioning, transport, and policy issues in a number of countries.

Ms. Reilly has a detailed understanding of the international regulatory framework within which the nuclear industry works and frequently advises on liability regimes and nuclear insurance, regulatory, and reporting requirements; the development of regulatory regimes; feasibility studies and structuring; the financing, development, construction, operation and maintenance of nuclear stations; and the fabrication, reprocessing, and storage of nuclear fuel and waste. She has worked on the development, structuring, and financing of nuclear new build projects in the UK, the Middle East, Russia, and Central and Eastern Europe, as well as decommissioning, waste, and life extension projects around the world.

Ms. Reilly is a Non-practicing Solicitor Advocate, holds a Master Degree from the University of Manchester, holds a graduate degree in Law and is a member of a number of associations including Women in Nuclear, the IBA, and TeCSA (where she also serves on the committee).

Ms. Régine SCHAPIRO

Head of Unit Space, Telecom Energy and Project Finance, State Guarantee Directorate of Coface, France

Ms. Régine Schapiro is in charge of Space, Telecom Energy and Project Finance for the State Guarantee Directorate of Coface. In this field, Coface has a large portfolio in a full range of sectors including power, petrochemical, LNG, constellation of satellites (the most recent ones are O3b in Great Britain, Ichtys in Australia, Emal II in Abu Dhabi, and Nghi Son in Vietnam).

Ms. Schapiro has been in charge of Space, Telecom, Energy since 2008 when Coface had to meet the increasing demand of support in space sector in connection with financial crisis coupled with increasing needs for space field. She has worked as Head of various geographical units including the portfolio of the nuclear projects involving French enterprises.

Ms. Schapiro holds a Master's in Law from the University of Paris.

Mr. Andrew STEEL

Managing Director, Head of Asia-Pacific Corporate Ratings Group

Mr. Andrew Steel is a regional managing director of Fitch Ratings Ltd, responsible for corporate ratings activities in the Asia-Pacific region. Prior to moving to Asia in 2010, he was head of Fitch's Energy, Utilities and Regulation rating services in Europe, the Middle East, and Africa.
From 2000 to 2004, Mr. Steel was head of ABN Amro's structured industry finance, power and utilities group for EMEA. He also worked for Edison Capital Europe as a private equity investment director, for PowerGen plc as a senior project finance manager, and as a mezzanine, leveraged buy-out and cross-border M&A lender in banking. Whilst in Europe, Mr. Steel actively assisted the UN's Economic Council for Europe, advising on energy and risk issues. He was also member of the UNECE Ad Hoc Group of Experts on Sustainable Energy Developments.
From 2006-2010, Mr. Steel was also a member of the independent advisory board of the trans-disciplinary energy research institute BriTE, as well as a trustee of the Great Ormand Street Hospital based children's charity CLEFT.

Andrew graduated from Bristol University with a BSc Hons in Psychology.

Dr. M. Hadid SUBKI

Project Manager, Technical Lead, Small and Medium-sized Reactors, International Atomic Energy Agency

Dr. Hadid Subki joined the IAEA Department of Nuclear Energy in May 2010 and was appointed as the Technical Lead responsible for small and medium-sized nuclear reactors (SMRs) technology development activities. He was recruited from the Mitsubishi Heavy Industries (MHI), Kobe, Japan. His duty is to contribute his expertise and experience to the planning, development, and implementation of the IAEA's programme in advanced small modular reactors.
Dr. Subki has 23 years of experience in reactor thermal-hydraulics and safety analysis for advanced nuclear reactors and several years as reactor operator. His key expertise is on reactor system design analysis, two-phase flow heat transfer, and safety analysis codes development. A native of Indonesia, he initiated his career as a researcher on TRIGA Mark II Reactor application in 1989 with BATAN. In 1992, Dr. Subki relocated to the United States assigned with GE Nuclear Energy in San Jose, California where he worked on both ABWR and SBWR advanced reactor developments. In 2000 he moved to Japan. Prior to joining the IAEA, he was an engineering manager in charge of safety analysis and design certification of the 1700 MWe US-APWR with the MHI in Kobe, Japan.

Dr. Subki earned his BS in Mechanical Engineering and MS degree in Mechanical Engineering from San Jose State University, California, USA. He obtained his PhD in Nuclear Engineering from Tokyo Institute of Technology, Japan followed by post-doctorate research.

Dr. Khaled TOUKAN

Chairman, Jordan Atomic Energy Commission

Dr. Khaled Toukan is regarded as among the most important academic and scientific figures in Jordan. Dr. Toukan obtained his B.E. in electrical engineering from the American University of Beirut, M.Sc. in nuclear engineering from the University of Michigan and his Ph.D. in nuclear engineering from the Massachusetts Institute of Technology in USA. Dr. Toukan was later appointed as the President of Al-Balqa Applied University, Minister of Education, Minister of Higher Education and Minister of Energy. During his term as Minister of Education, Dr. Toukan launched the “Education Reform for the Knowledge Economy” (ERfKE) Project throughout all schools in Jordan. ERfKE has had a big impact on the improvement of Jordan’s national scores in “Trends in International Mathematics and Science Study” (TIMSS). Dr. Toukan is currently the Chairman of Jordan Atomic Energy Commission, the Chair of Board of Trustees of the University of Jordan and Director of the Synchrotron-light for Experimental Science and Applications in the Middle East (SESAME) Center.

Dr. Toukan holds several distinguished international and national medals of honour and is the winner of several awards and prizes.

Mr. Peter WELLS

Technical Programme Manager, Safety Assessment Section, International Atomic Energy Agency (IAEA)

Mr. Peter Wells has more than 30 years of experience in technical project and programme management at national and international levels. Since joining the IAEA in 2009, he has managed and coordinated all extra-budgetary programmes within the Safety Assessment Section of the IAEA, funded by several international donor countries. These safety assessment projects assist IAEA Member States introducing new nuclear power programmes as well as those with existing programmes. Technical activities include education and training in probabilistic and deterministic safety assessment, defence in depth, and severe accident management. Mr. Wells is also certified as an Emergency Response Manager for the IAEA’s Incident and Emergency Centre.
Prior to working at the IAEA, Mr. Wells managed several departments and projects at the Idaho National Laboratory and Argonne National Laboratory-West, both located in Idaho Falls, Idaho. These departments held responsibility for nuclear nonproliferation operations, providing support to various customers, including the U.S. Department of Energy and Department of Defense as well as national security activities, including the BN-350 shutdown project in Kazakhstan. Mr Wells also served as the U.S. Deputy Director of the International Center for Environmental Safety established by the U.S. Department of Energy, a collaborative programme with the Russian Federation.
Before moving to Idaho, Mr. Wells managed activities related to the fast attack submarine testing programme at Newport News Shipbuilding. He also served in the U.S. Naval Reserve as an officer in the Civil Engineering Corp.

Mr. Wells holds a bachelor's degree in Mechanical Engineering from Old Dominion University and a Master’s Degree in Business Administration from Idaho State University.

Mr. Bin XU

Deputy Chief Designer of ACP100 SMR Project, Nuclear Power Institute of China

Mr. Bin Xu is a Professional Level Senior Engineer with the Nuclear Power Institute of China. He is the Deputy Chief Designer of ACP100 SMR Project. Mr. Xu has more than 20 years of experience in reactor overall design, with a special focus on reactor structure Design. He has participated in the reactor structure design of more than 20 reactors.

Mr. Xu earned a Bachelor of Engineering from Shanghai Jiao Tong University and an MBA from Southwest Jiao Tong University.

Dr. Xing L. YAN

Leader, HTGR Heat Application System Design Group, Nuclear Hydrogen and Heat Application Research Center, Japan Atomic Energy Agency

Xing L. Yan received his Ph.D. from the Massachusetts Institute of Technology in 1990. He participated in the United States Department of Energy's development program on modular high temperature gas-cooled reactor and was consultant to nuclear industry and research organizations in France, Japan, Netherlands and the United States. Since joining in Japan Atomic Energy Agency in 1998, Dr. Yan has led the technical design and development for the commercial plant system GTHTR300 integrating gas turbine power generation and various industrial heat applications with the high temperature gas-cooled reactor technology. Additionally he is the technical chair of the OECD LOFC Project, a seven-country joint advanced reactor safety research program performed on the high temperature engineering test reactor HTTR in JAEA. Dr. Yan is a long-time contributor to IAEA coordinated research activities on non-electric applications including nuclear hydrogen production and cogeneration.

Mr. Alexander ZBIORCZYK

Business Development and Project Finance, Global Power Group, CB&I

Mr. Alexander Zbiorczyk is responsible for worldwide Business Development activities in the Global Power Group of CB&I. As part of this responsibility, Mr. Zbiorczyk focuses on the growing opportunities in the international Nuclear Power markets. CB&I is one of the world's prime Contractors for Engineering, Procurement and Construction of Nuclear Power facilities, currently executing large portfolios of new build Nuclear Power Plants both in the United States and Asia. In addition, Mr. Zbiorczyk has the worldwide responsibility for the Funding and Financing of Power Projects for both Fossil and Nuclear Projects. In this capacity Mr. Zbiorczyk is frequently interfacing with Plant Owners, Lending Institutions, ECAs, Investors, and Government Representatives on a global scale. Prior to working with CB&I Mr. Zbiorczyk pursued a career in the Mergers & Acquisition industry as well as the Project Finance sector working for renowned institutions like HSBC, Dubai International Capital, MMC Energy primarily focusing on Infrastructure and Energy related Assets and Projects. Mr. Zbiorczyk also worked for world class players in the Energy/Power Generation industry managing large scale EPC Power Projects in key markets and including the entire spectrum of Technologies from Fossil to Nuclear.

Mr. Zbiorczyk holds Masters of Business Administration with both the London Business School, UK, and the Columbia University in New York City. In addition Mr. Zbiorczyk received his first Master in Mechanical Engineering from the Federal Institute of Technology in Zurich, Switzerland.

Appendix C: Registration List

Name	Title	Ministry / Organization
Algeria		
Latifa TRAI	Attache Cultural	Embassy of the People's Democratic Republic of Algeria
Sidi Mohamed GAOUAR	Ambassador of Algeria in Jordan	The People's Democratic Republic of Algeria
Argentina		
Mauricio BISAUTA	Vice President	National Atomic Energy Commission (CNEA)
Osvaldo CALZETTA	Head of CAREM	National Atomic Energy Commission (CNEA)
Facundo DELUCHI	Head of Institutional Relations	National Atomic Energy Commission (CNEA)
Armenia, Republic of		
Areg GALSTYAN	Deputy Minister	Republic of Armenia Ministry of Energy and Natural Resources
Australia		
Mark HO	Thermohydraulic Analyst	ANSTO
Adi PATERSON	CEO	ANSTO
Anthony IRWIN	Technical Director	SMR Nuclear Technology Pty Ltd
Brazil		
Renate STILLE	Ambassador of Brazil to Jordan	Brazilian Embassy in Amman - Jordan
Bulgaria		
Albena BELYANOVA	Head of Legal Department	Bulgarian Energy Holding EAD
Severin VARTIGOV	Deputy Executive Director	Bulgarian Energy Holding EAD
China		
Yu ZHANG	Nuclear Power Department	CNEA
Jianfeng ZHENG	Nuclear Power Department	CNEA
Bin XU	Deputy Chief Designer of ACP100	Nuclear Power Institute of China
Egypt		
Moustafa Abd Elsalam Aly ALY		Middle Eastern Regional Radioisotope Centre for the Arab Countries (MERRCAC)
Moustafa Abdel AZIZ	Director General	Middle Eastern Regional Radioisotope Centre for the Arab Countries (MERRCAC)
France		
Jacques CHENAIS	SMR Director	CEA
Régine SCHAPIRO	Head of Unit Space-Telecom-Energy-Project Finance	COFACE
Vincent TOUSSAINT	Economic Counsellor	French Embassy
Hungary		
Bela JUNGBERT	Ambassador	Embassy of Hungary
International Atomic Energy Agency (IAEA)		
Hadid SUBKI	Technical Lead for SMR Technology Development	IAEA
Peter WELLS	Technical Programme Manager	IAEA
Indonesia, Republic of		
Teguh WARDOYO	Ambassador Extraordinary and Plenipotentiary	Embassy of Indonesia

Italy		
Andrea DEL MELIS	Economic & Commercial Attache	Italian Embassy in Jordan - Amman
Japan		
Takaaki MOCHIDA	Manager	Hitachi-GE Nuclear Energy, Ltd.
Xing YAN		Japan Atomic Energy Agency
Jordan		
Adli KANDAH	Director General	Association of Banks in Jordan
Wijdan ALRABADI	Commissioner	Energy and Mineral Regulatory Commission
Mohammad BQOOR	Director Nuclear Safety and Security Directorate	Energy and Mineral Regulatory Commission
Majd HAWWARI	Member/Board of Commissioners	Energy and Mineral Regulatory Commission
Tamer KASHT	Head of International Cooperation	Energy and Mineral Regulatory Commission
Khalifeh ABUSALEEM	Commissioner for Nuclear Research	Jordan Atomic Energy Commission
Randa ALQUDAH	International Cooperation Department	Jordan Atomic Energy Commission
Jad ALRABADI	International Cooperation Department	Jordan Atomic Energy Commission
Dala AMAWI	Director of International Cooperation Department	Jordan Atomic Energy Commission
Kamal ARAJ	Vice Chairman & Commissioner for Nuclear	Jordan Atomic Energy Commission
Eyad QUTISHAT	Director of Nuclear Safety Directorate	Jordan Atomic Energy Commission
Khaled TOUKAN	Chairman	Jordan Atomic Energy Commission
Abdul-Halim WRIEKAT	Commissioner for Nuclear Sciences & Applications	Jordan Atomic Energy Commission
Yahia A. Jawad AL-QAWASMI	Dean of Engineering	Jordan University of Science & Technology
Mohammed HAMED	Minister of Energy and Mineral Resources	Ministry of Energy and Mineral Resources
Susan KILANI	Advisor/Water Quality Management	Ministry of Water and Irrigation
Korea, Republic of		
Suhn CHOI	Vice President Small Modular Reactor Development	Korea Atomic Energy Research Institute (KAERI)
Park KILJAE	Deputy Director	Ministry of Science, ICT and Future Planning
Youngkee KIM	Director General	The Export-Import Bank of Korea
Netherlands		
Paul VAN DEN IJSSEL	Ambassador	Embassy of the Netherlands in Jordan
Poland		
Krzysztof BOJKO	Ambassador	Embassy of the Republic of Poland in Amman
Romania		
Flavius APOSTOLESCU	Economic Counsellor	Embassy of Romania
Bogdan FILIP	Ambassador	Embassy of Romania
Augustin ACULAI	General Director	Nuclear Agency and Radioactive Waste
Alice DIMA	Mariana Deputy General Director	Nuclear Agency and Radioactive

		Waste
Daniela Violeta NASATE	Director of Economical Division	Nuclear Agency and Radioactive Waste
Russia		
Yury FADEEV	Chief Designer	JSC Afrikantov OKBM
Fedor GRIGORIEV	Advisor	ROSATOM
Milko KOVACHEV	Vice President	ROSATOM
Leos TOMICEK	Vice President	ROSATOM
Saudi Arabia		
Maher ALODAN	Director	KACARE
Abdulhamid HASAN	Assistant Director/Nuclear Science Research Institute	King Abdulaziz City for Science and Technology
South Africa		
Xolisa MABHONGO	Group Executive: Corporate Services	NECSA
Holger FINKEN	Plant Integration Engineer/Mechanical Engineer	Steenkampskraal Thorium Limited (STL)
Spain		
Francisco José Alfonso AGUIRRE	Commercial Attaché	Spanish Embassy - Commercial Office
Turkey		
Gorkem GUNGOR	Nuclear Specialist	Ministry of Energy and Natural Resources
UAE		
Nadira BARKATULLAH	Director of Economic Regulation	UAE Regulation and Supervision Bureau
UK		
Charles BOYLE	Director MENA Region Nuclear	AMEC
Andrew STEEL	Managing Director	Fitch Ratings Ltd.
Paul HOLLIDAY	Managing Director	Marsh Limited
Keith MILLER	Head of Marketing	National Nuclear Laboratory
John MATHIESON	Head of International Relations	Nuclear Decommissioning Authority
John IRELAND	Business Manager	NUVIA Limited
Edward DE LA BILLIERE	Director	Prospect Law Ltd.
Claire HARVEY	Senior Commercial and Nuclear Energy Lawyer	Prospect Law Ltd.
Fiona REILLY	Capital Projects and Infrastructure – Nuclear	PwC
USA		
Mel FIELDS	Senior Engineer	AdSTM
Matthew VAZQUEZ	S&C Project Engineer	ASME
Robert MUSSLER	Associate	Booz Allen Hamilton
Alexander ZBIORCZYK	Vice President & Director of Business	CB&I
Jack EDLOW	President	Edlow International
Stephanie T. WILLIAMS	Deputy Chief of Mission	Embassy of the United States of America
Michael Monir KOLTA	Project Engineer	ERICO
Gary LEIDICH	President	Gary Leidich LLC
Paul MARKS	Senior Manager Nuclear Systems and Power	Lockheed Martin

Paul MURPHY	Special Counsel	Milbank, Tweed, Hadley & McCloy LLP
Christopher COLBERT	COO	Nuscale Power
John HOPKINS	Chairman and Chief Executive Officer	Nuscale Power
James GLASGOW	Partner	Pillsbury Law
Ali AHMAD	Research Fellow	Princeton University
James K. ASSELSTINE	Retired Former Managing Director Barclays	Retired
George BOROVAS	Partner Head-Global Nuclear	Shearman & Sterling LLP
Geoffrey S. BOGART	Commercial Counselor	U.S. Commercial Service
Fareedon HARTOQA	Commercial Specialist	U.S. Commercial Service
Jonathan CHESEBRO	Senior Nuclear Trade Specialist	U.S. Department of Commerce
Patrick BALL	Economic Officer	U.S. Department of State
Alex BURKART	Deputy Director, Office of Nuclear Energy, Safety and Security	U.S. Department of State
Brian GRIMM	Economic Counselor	U.S. Department of State
Aleshia DUNCAN	Specialist IFNEC Secretariat	U.S. DOE, Office of Nuclear Energy
Pete LYONS	Assistant Secretary of Nuclear Energy	U.S. DOE, Office of Nuclear Energy
Edward MCGINNIS	Deputy Assistant Secretary for International NuclearDeputy Assistant Secretary for International Nuclear Energy Policy and Cooperation	U.S. DOE, Office of Nuclear Energy
Elizabeth RAMSAY	Chief of Staff	U.S. DOE, Office of Nuclear Energy
Stewart MAGRUDER	Branch Chief	U.S. NRC
Shannon FARR	Senior Communications Specialist	Westinghouse
Robin RICKMAN	Director Small Modular Reactor Program	Westinghouse
World Nuclear Association		
Shah Nawaz AHMAD	Senior Advisor	World Nuclear Association

Appendix D: Breakout Session Results

Each Breakout Session was conducted by two co-chairs who made the Sessions possible. After each Moderated Scenario discussion, the plenary broke into four Breakout Session groups. This means that there were four Breakout Sessions after Scenario 1, and four Breakout Sessions after Scenario 2, for a total of eight workshop Breakout Sessions.

The subject discussed in Breakout Sessions 1 and 2 was the evaluation of the previous Moderated Scenario discussions. Breakout Session 3 was a topical discussion of the Applicability of Safety Conventions and IAEA Guidance to SMRs. Session 4 was also a topical discussion on Fuel Cycle and Waste Management Issues. During each Breakout Session the co-chairs took notes of the discussions.

Thus, for each set of four Breakout Sessions, the Sessions were as follows:

- Breakout Session 1: Evaluation of the previous Scenario
    - Co-Chair: Jack Edlow
    - Co-Chair: Hadid Subki
- Breakout Session 2: Evaluation of the previous Scenario
    - Co-Chair: Claire Harvey
    - Co-Chair: Fiona Reilly
- Breakout Session 3: Discussion on the Applicability of Safety Conventions and IAEA Guidance to SMRs
    - Co-Chair: Al Burkart
    - Co-Chair: Pete Wells
- Breakout Session 4: Discussion on Fuel Cycle and Waste Management Issues
    - Co-Chair: John Mathieson
    - Co-Chair: Keith Miller

Following the Breakout Sessions the co-chairs returned to the assembled plenary and provided a report of the Session. The following are summaries of those reports of the co-chairs to the plenary. For completeness of the record, the notes taken during the Sessions by the co-chairs are included on the accompanying CD.

Scenario 1: Existing Nuclear Program

Breakout Session 1
Evaluation of Scenario

Summary of remarks presented by the co-chairs to the Workshop plenary following the completion of the Breakout Session:

1. ***Prioritization:*** Need to prioritize items both generally and specifically. For example in Japan they are focusing on developing the technology, proving the technology first with the government putting a lot of money into it as a priority before they begin to talk about how to take it to the market. For others, financials have priority, how will the financing process work. There is not a one size fits all approach to SMR technology development and we have to understand how to prioritize for different markets.
2. ***Political risk in different countries has different issues:*** It is an important issue to take into account because things change from time to time.
3. ***Ramping up after starting with one unit and then proceeding to perhaps four units could be very interesting:*** The first will be very expensive and the fourth much more economic. How do you blend this with the economic regulator. This needs to be expanded upon.
4. ***Protection of ratepayers:*** The national energy agenda needs to be taken into account to prioritize how energy will be developed for different projects. For example, desalination can be a priority.
5. ***Regulatory approval presents a very great risk:*** This was somewhat underplayed in the Scenario discussion. The length of the regulatory process is uncertain and approaches are needed to address this uncertainty.

Breakout Session 2
Evaluation of Scenario

Summary of remarks presented by the co-chairs to the Workshop plenary following the completion of the Breakout Session:

1. ***Issues associated with regulations:*** How you would get design certification from the vendor's country of origin, and whether that would be accepted in the country where it is being built. It would be simpler if the vendor country certification could be accepted but there are real issues as to how you make the host country regulator comfortable with that, and how do you manage that process.
2. ***Importance of a fleet approach:*** There is a difference3 between first of a kind and first of a fleet, having a fleet approach is important. No vendor is going to make this work unless they have a number of projects in development and there is a commitment to purchase a number of units over a number of years.

3. ***Importance of government involvement:*** The importance and role of government to government agreements needs to be recognized, and how you would make that work between countries. The first of a kind risk assumption by the host country might be addressed to some extent by the vendor country providing some financial support.
4. ***Corporate finance not an option:*** There was a strong view that corporate finance would not work and there was a need to look at project financing or government financing of some sort.
5. ***First get one unit completed and running:*** An approach that had support in the discussions was getting one unit up and running at a site, and then proceeding with the development of additional units at that site.
6. ***SMR construction period:*** *Another part* of the discussion involved understanding when the construction period starts with SMRs. When the order is placed or before that? The consensus was that it came down to money and when the unit was going to be available, and whether could you back end the cost payments to the vendor in order to reduce your financing costs.
7. ***Need to understand the relationship between financing and the construction period versus the expiration period.***
8. ***Public acceptance:*** Another point was that public acceptance will be enhanced if they see SMRs as small, safe electricity reactors and not focus on the word reactor, i.e., a nuclear reactor.

Breakout Session 3
Discussion of the Applicability of Safety Conventions and IAEA Guidance to SMRs

Summary of remarks presented by the co-chairs to the Workshop plenary following the completion of the Breakout Session:

1. ***Standards:*** General conclusion was that the standards needed to be looked at carefully to see if there were things that needed to be changed to ensure the innovative designs utilized by SMRs are properly covered (see item 3 below). With the time allotted the discussion did not get into details.
2. ***Land based vs floating reactors:*** The group noted that the Convention on Nuclear Safety applies to land based reactors and that floating plants raise additional issues.
3. ***IAEA assistance:*** The Session identified a number of ways that the IAEA could help with deployment issues. One would be to do a generic reactor safety review where the safety case for design is compared against the safety standards. Suggestion was to do a review in reverse, bring in experts who know the safety case for an SMR and they look at safety standards to see if there are any gaps and if they are providing the guidance needed. For example, there may be a standard that requires a minimum number of personnel staffing in a control room, and maybe an SMR can have less than that. There may be areas than need to be reviewed. The idea is that, with the support of vendors, look at the safety requirements against the designs, where the process is typically to review the design against the requirements.
4. ***Addressing country specific questions to facilitate deployment:*** The Session noted that one of the things the IAEA does well is getting countries together to address questions. By bringing

countries together in support of facilitating SMR deployment, the following issues could be discussed (examples):how to translate running a nuclear program (current experience) into ideas for SMRs. What are the issues in a multi module plant? What are other fora besides the IAEA or the NEA for addressing issues? How could you make use of the IAEA's various expert missions?

5. ***Infrastructure document for SMRs:*** SSG 16 is the IAEA's new infrastructure document for safety for embarking countries. Can/should a similar type document with all the infrastructure issues be developed for SMRs?
6. ***Additional ideas that needed further discussion:*** What safety improvements can come out of standardization and simplification? Is it possible to get international approval for designs, and international standards for operators and security staff? What international organization has the authority to regulate design, operational standards, security standards, licensing? While not at all within the current IAEA mandate, could the IAEA play that role? Could safety standards address limits of liability? Is lower liability possible for SMRs based on lower risk?

Breakout Session 4
Discussion of Fuel Cycle and Waste Management Issues

Summary of remarks presented by the co-chairs to the Workshop plenary following the completion of the Breakout Session:

Several assumptions were made prior to the discussion:

- Government policy on waste management in place
- Waste management organization exists
- Near surface repository in operation
- Geological disposal facility planned or available
- Regulatory infrastructure in place
- Waste management costs understood (for existing fleet)

1. ***Reliable fuel supply***: The Session noted that there are advantages to fuel leasing in this Scenario.

2. ***Waste generation***: Waste generated by LWR SMRs is greater than that of large-scale LWRs on a per MWe basis. Does this pose a challenge to SMR deployment? Fuel burn-up is lower than for GW scale so proportionally SMRs generate more waste, but if burn-up is greater than 5 year, there may be cost reductions. Are there any novel waste forms associated with a particular SMR design, e.g. HTRs? Modularity may give rise to waste management issues on a particular site: n reactors means n x fuel movements, waste movements etc.

   It is important to note that SMR burn-up rates (GWd/t) are not necessarily lower than GW Class designs. It depends on which SMR design is being compared. Waste arisings, fuel movements, core shuffling, etc. are all dependent on the design being considered. This is definitely not a "one size fits all" situation.

3. ***Special decommissioning challenges***: What are the appropriate waste management arrangements to be put in place between the vendor and the customer? Has anyone put together a funded decommissioning program (FDP) for an SMR to help with comparisons? It was noted that decades are still required for deferred decommissioning. However it may be easier to decommission SMRs if there are fewer pumps, etc., in a passively safe design.

4. ***Reprocessing issues***: Does shorter fuel for SMRs result in more significant reprocessing costs? What countries are the potential reprocessors: Japan, China, France, Russia, the United Kingdom? It was noted that some countries may choose not to reprocess.

5. ***Waste management and decommissioning funding issues***: What are waste management costs per unit volume of waste generated? What funding issues might arise?

Scenario 2: Embarking Nuclear Program

Breakout Session 1
Evaluation of Scenario

Summary of remarks presented by the co-chairs to the Workshop plenary following the completion of the Breakout Session:

1. ***The essence of the discussion was, "how to make it work":*** The sense was that there are a lot of reasons that a project in this embarking country Scenario would not work.
2. ***The key is risk allocation:*** One extreme is to work with a national entity and seek to transfer virtually all of the risks to the vendor, EPC contractor and exporting country. The other extreme is to try and do it the commercial way.
3. ***Host country risk assumption:*** The host country will have to determine how to deal with some of the risks such as how to procure the technology, conduct the licensing process, and start the construction in a way that works with the supply chain.
4. ***Risk allocation:*** The question is how to allocate the risks in a fair way that allows all parties to get what they want.
5. ***Construction risk:*** A lot of the risk is in the construction period. One option is to bring in a neighboring country to assist in financing.
6. ***Oil and gas industry corollary*** : The oil and gas industry was suggested as one that has similar risks to the nuclear industry. A lot of risk money has to be put up front in both industries and only later in the project can you take some of the risk out.
7. ***Independent power producers:*** There was also discussion about an independent power producer (IPP) approach to this project and how the past experience with oil or coal fired plants might but useful. Although the regulatory structure is very different, there may be some aspects of this past experience with other energy forms that could be relevant. Participants noted that an IPP approach for SMRs should be possible, and in fact an IPP approach for large reactors is currently happening.
8. ***Deployment structures:*** There was a conclusion that there are a number of possible structures for deployment that could work.

Breakout Session 2
Evaluation of Scenario

Summary of remarks presented by the co-chairs to the Workshop plenary following the completion of the Breakout Session:

1. ***The Session took an approach of, "we are doing this project, what will help us to get there."***
2. ***Regulatory approval:*** The first issue was regulatory approval and how you would do that. There is a need to build up the regulatory approval process and regulatory capacity, put all of the regulatory functions in place, and then subcontract some of the required procedures. This

involves bringing in the regulatory capability while at the same time training your people over the course of the project.

3. ***Multiple country approach:*** A suggestion was made to consider bringing several countries together to pursue SMRs at the same time and developing a coordination process that would include perhaps a single regulatory process to be applied specifically in each country but managed by a central contractor. This would endeavor to maximize standardization across the country projects while leveraging the opportunities to avoid duplication where it makes sense.
4. ***Information function:*** Another suggestion was putting together an information sharing function that addresses the needs and limitations of the embarking countries that are candidates for SMR technology. This would be used to facilitate practical discussions regarding specific deployment opportunities.
5. ***Early project structure decision:*** There is a need to settle on the project structure in early coordination with lenders, vendors, insurers, etc., so the project can move forward efficiently.

Breakout Session 3
Applicability of Safety Conventions and IAEA Guidance to SMRs

Summary of remarks presented by the co-chairs to the Workshop plenary following the completion of the Breakout Session:

1. ***Application of the Convention on Nuclear Safety:*** Focused first on a couple of provisions from the Convention on Nuclear Safety. The conclusion was that they do not change for an embarking country or established country or for a large reactor or an SMR, but there are more challenges for an embarking country trying to implement those responsibilities.
2. ***Adequacy of IAEA guidance:*** Questions were raised regarding whether the IAEA guidance is sufficient or does it need to be updated. This was a theme that came up. Does the guidance included in SSG-16, the IAEA guidance for safety infrastructure development for a nuclear power programme, work for SMRs? Is there sufficient guidance? Is it flexible enough? Is there sufficient information available to an embarking country to enable them to address the guidance as it might apply to SMRs? Another question raised was whether there are aspects of SMRs that present unique operational issues and are they being addressed by the guidance?
3. ***Independent verification:*** One of the points in SSG-16 is the need for independent verification of safety analyses, and in that context - if there is a dominant position by a vendor or vendor country, how does that affect the ability of the regulatory to perform independent analyses?
4. ***Shorter time for developing regulatory competence:*** The shorter time period for developing SMRs provides less time for an embarking country to establish regulatory competence, which is a negative.

5. ***Host access to manufacturing:*** How does the host country access the manufacturing of components in another country? There will need to be contractual access to overseas manufacturers with regulatory support for that access.
6. ***All of these issues demonstrate the need to strengthen international quality assurance standards.***
7. ***SMRs do not provide any shortcuts for the regulator:*** IAEA needs to assure that their guidance is adequate for embarking countries to deploy this technology.

Breakout Session 4
Discussion of Fuel Cycle and Waste Management Issues

Summary of remarks presented by the co-chairs to the Workshop plenary following the completion of the Breakout Session:

1. ***Underlying assumption - lack of waste management infrastructure***: The country's government policy and strategy are likely not in place, with the exception of a (small) Waste Management Organization. While a near-surface repository is possibly in operation for institutional wastes, a geological disposal facility is not planned, although waste management costs for SMR are generally understood. The county's regulatory infrastructure in place but inexperienced.
2. ***Fuel leasing as an option:*** Fuel leasing may be one option to consider for SMR waste management. The United States took back U.S.-supplied fuel for research reactors (RRs), which may have been the precedent. Russia also did this. Depending on supplier country willingness, a country could return SMR fuel for ultimate disposition. SMR fuel could be considered a special case and treated as RR fuel; SMR fuel is smaller in volume than regular fuel, but with several reactors, overall volumes will be higher. Vendors cannot arrange fuel leasing; it has to be the country under a government-to-government agreement.
3. ***Importance of options:*** Countries interested in SMRs need to have waste management options to consider. Consent rights of SMR supplier countries (including fuel, uranium enrichment, and components) could be an issue – and Requests for Proposals (RFPs) should reflect this.
4. ***Role of the SMR supplier country:*** Host countries evaluating SMR technologies and related fuel supply issues should consider the ability and willingness of supplier countries to reprocess and dispose of waste. There already are advanced consent mechanisms in place under some 123 Agreements. For example, the United States has provided advanced consent for the transfer of used nuclear fuel to the United Kingdom and France.
5. ***Restrictions imposed by SMR supplier country:*** SMR supplier countries might insist on commitment by host country not to deploy enrichment and reprocessing. Questions to consider: Where would the supplier country's policy be? Why would a host country want to reprocess? Would the host country potentially want something in return? A potential solution is to create a package that is financially favorable and includes a commitment to take back used nuclear fuel.
6. ***Non-proliferation advantages:*** If vendor country assists with waste management, the advantage is that it fulfils non-proliferation obligations – no other nonproliferation advantages for LWR SMRs compared to larger reactors. Discussions about waste

management agreements should be had at the outset of project development. Regulator will want to see these arrangements.

7. ***Vendor-customer arrangements***: One question that was raised: What are the appropriate waste management arrangements to be put in place between the vendor and the customer? (1) Take back the used fuel: The vendor could reprocess, then return very high level waste; the vendor could return as intermediate level waste under substitution arrangements, which are more publicly acceptable; (2) Direct disposal; (3) Store onsite: Current design of SMRs incorporate facilities for secure storage of used nuclear fuel; (4) Decommissioning wastes: Decommissioning is easier to deal with by host country and is publicly more acceptable; SMRs involve small quantities of low level waste
8. ***Funding issues***: One question to ask: Is there a Funded Decommissioning Program in place
9. ***Role of regional repositories***: It may be useful to revisit Comprehensive Fuel Supply discussions and the Global Nuclear Energy Partnership (GNEP)Environmental Assessment (EA); IFNEC should look at the role of national governments in SMR deployment in developing countries by facilitating discussions (or be more proactive) on economics of SMRs taking account of waste management aspects

The attached CD contains:

- **Electronic copy of the report**
- **Appendices A – I**

A: Workshop Agenda
B: Speaker Biographies
C: Registration List
D: Breakout Session Results
E: Moderated Scenario Session Materials
F: Breakout Session Materials
G: Information for Vendors to Address
H: Workshop Presentations
I: Breakout Session Notes

All materials are also available at www.ifnec.org.